AMETEK®
SENSORS, TEST & CALIBRATION

# Reference manual

# Reference Temperature Calibrator

# Jofra RTC-156/157/158/159/187/250/700 A/B/C

# Reference Manual

## Reference Temperature Calibrator

### JOFRA RTC-156/157/158/159/187/250/700 A/B/C

© Copyright 2012 AMETEK Denmark A/S

# About this manual….

- **The structure of the manual**
  This manual is divided into 10 chapters. These describe how to set up, operate, service and maintain the calibrator. The technical specifications are described and accessories may be ordered from the list of accessories.

  Along with the calibrator, you should have received a multi-lingual user manual, which sets out the operating instructions for the instrument. It is designed to provide a quick reference guide for use in the field.

- **Safety symbols**
  This manual contains a number of safety symbols designed to draw your attention to instructions that must be followed when using the instrument, as well as any risks involved.

## Warning

Conditions and actions that may compromise the safe use of the instrument and result in considerable personal injury or material damage.

## Caution…

Conditions and actions that may compromise the safe use of the instrument and result in slight personal or material damage.

## Note…

Special situations, which demand the user’s attention.

# List of contents


**1.0 Introduction ..... 6**

1.1 Warranty ..... 8

**2.0 Safety instructions ..... 9**

**3.0 Setting up the calibrator ..... 16**

3.1 Receipt of the calibrator ..... 16

3.2 Preparing the dry-block calibrator ..... 19

3.2.1 When setting up the dry-block calibrator, you must… ... 21

3.2.2 Choice of insertion tube ..... 23

3.2.3 Inserting the sensors ..... 24

3.3 Preparing the liquid bath calibrator (RTC-158/250 A/B/C only) .. 26

3.3.1 When setting up the liquid bath calibrator, you must… . 29

3.3.2 Selection of fluids ..... 34

3.3.3 Handling of lids ..... 35

3.3.4 Inserting the sensors ..... 36

3.4 Programming intelligent sensors ..... 37

**4.0 Operating the Calibrator ..... 38**

4.1 Standard connections ..... 38

4.2 Input modules (B and C versions only) ..... 40

4.3 Keyboard and main screen display overview ..... 42

4.3.1 Main screen display information ..... 45

4.3.2 Main screen temperature values ..... 47

4.3.3 Stability of temperature values ..... 47

4.4 Operating principle ..... 48

4.4.1 Horizontal Menu ..... 48

4.4.2 Vertical Menu ..... 49

4.4.3 Parameter Fields ..... 50

4.4.4 Working with lists ..... 52

4.5 Starting the calibrator ..... 55

4.6 Setting the temperature ..... 56

4.7 Calibration ..... 56

4.7.1 Running a calibration ..... 58

4.7.2 Viewing calibration results ..... 62

4.7.3 Displaying calibration information ..... 63

4.7.4 Deleting workorders ..... 65

4.8 Switch test menu ..... 66

4.8.1 Running a switch test ..... 67

4.8.2 Showing switch test results ..... 69

4.9 Auto step menu ..... 73

4.9.1 Running an Auto step calibration ..... 73
4.9.2 Auto Step test results ..... 76
4.10 Sensor Setup menu ..... 78
4.10.1 Setting the additional stability time (A version) ..... 78
4.10.2 Setting the parameters for TRUE – reference sensor (B and C versions only) ..... 79
4.10.3 Setting the parameters for DLC– dynamic load compensation (B and C versions only) ..... 81
4.10.4 Setting the parameters for SUT– Sensor under test (B versions only) ..... 81
4.10.5 Viewing the Reference and DLC data (B and C versions only) ..... 84
4.11 Calibrator Setup menu ..... 86
4.11.1 Setting the temperature parameters ..... 86
4.11.2 Setting the temperature resolution ..... 88
4.11.3 Setting the sound, volume and operating mode ..... 89
4.11.4 Setting calibration interval ..... 90
4.11.5 Changing the date and time ..... 90
4.11.6 Saving a setup ..... 91
4.11.7 Loading a setup ..... 92
4.11.8 Resetting the instrument setup to factory defaults ..... 93
4.11.9 Network Configuration (for service use only) ..... 93
4.12 Selecting the stirrer speed (RTC-158/250 A/B/C only) ..... 94
4.13 Information Screen ..... 95
4.14 About the calibrator ..... 96
4.15 Simulation or training ..... 96
**5.0 After use ..... 98**
5.1 Storing and transporting the calibrator ..... 98
5.1.1 Transporting the dry-block calibrator ..... 100
5.1.2 Transporting the liquid bath calibrator ..... 101
5.2 Emptying the well (liquid baths only) ..... 101
**6.0 Replacing the main fuses ..... 103**
6.1 Error messages ..... 104
6.2 Returning the calibrator for service ..... 107
**7.0 Maintenance ..... 110**
7.1 Cleaning ..... 110
7.2 Adjusting and calibrating the instrument ..... 112
7.3 Maintenance of STS-reference sensor ..... 114
7.4 Maintenance of DLC-sensor ..... 116
7.5 Testing the overtemperature function ..... 117

**8.0 Technical specifications ..... 118**
**9.0 List of accessories ..... 175**
**10.0 Standard insertion tubes ..... 178**

# 1.0 Introduction

## *Congratulations on your new AMETEK JOFRA RTC Calibrator!*

With this AMETEK JOFRA calibrator, you have chosen an extremely effective instrument, which we hope will live up to all your expectations. Over the past many years, we have acquired extensive knowledge of industrial temperature calibration. This expertise is reflected in our products, which are all designed for daily use in an industrial environment. Please note that we are very interested in hearing from you, if you have any ideas or suggestions for changes to our products.

This reference manual applies to the following instruments:

- **JOFRA RTC-156 A - Temperature calibrator**
- **JOFRA RTC-156 B - Temperature calibrator with sensor and reference inputs**
- **JOFRA RTC-156 C - Temperature calibrator with reference input**
- **JOFRA RTC-157 A – Temperature calibrator**
- **JOFRA RTC-157 B – Temperature calibrator with sensor and reference inputs**
- **JOFRA RTC-157 C - Temperature calibrator with reference input**
- **JOFRA RTC-158 A – Temperature calibrator**
- **JOFRA RTC-158 B – Temperature calibrator with sensor and reference inputs**
- **JOFRA RTC-158 C - Temperature calibrator with reference input**
- **JOFRA RTC-159 A – Temperature calibrator**
- **JOFRA RTC-159 B – Temperature calibrator with sensor and reference inputs**
- **JOFRA RTC-159 C - Temperature calibrator with reference input**
- **JOFRA RTC-187 A – Temperature calibrator**
- **JOFRA RTC-187 B – Temperature calibrator with sensor and reference inputs**
- **JOFRA RTC-187 C - Temperature calibrator with reference input**
- **JOFRA RTC-250 A – Temperature calibrator**
- **JOFRA RTC-250 B – Temperature calibrator with sensor and reference inputs**
- **JOFRA RTC-250 C - Temperature calibrator with reference input**
- **JOFRA RTC-700 A - Temperature calibrator**
- **JOFRA RTC-700 B - Temperature calibrator with sensor and**

**reference inputs**

- **JOFRA RTC-700 C - Temperature calibrator with reference input**

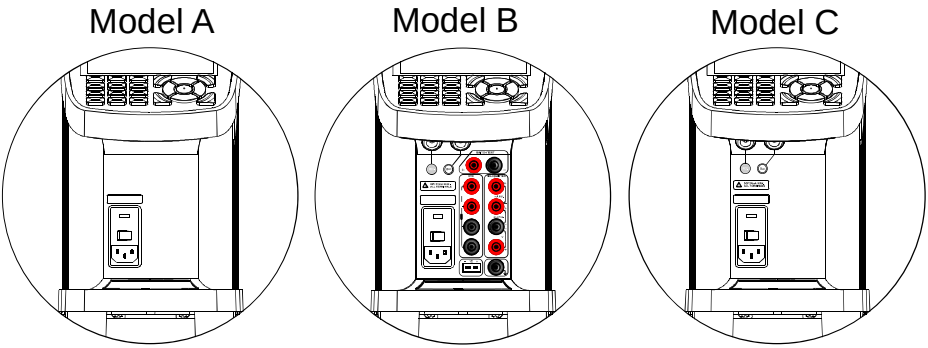


## ISO-9001 certified

AMETEK Denmark A/S was ISO-9001 certified in September 1994 by Bureau Veritas Certification Denmark.

## CE-label

Your new temperature calibrator bears the CE label and conforms to the Electromagnetic Compatibility (EMC) Directive 2014/30/EU and the Low Voltage Directive 2014/35/EU and RoHS Recast (RoHS II) Directive 2011/65/EU*.

## Technical assistance

Please contact the dealer from whom you acquired the instrument if you require technical assistance.

* RTC-156 A / RTC-156 B / RTC-156 C from serial no. xxxxxx-00837, RTC-157 A / RTC-157 B / RTC-157 C from serial no. xxxxxx-00864 RTC-158 A / RTC-158 B / RTC-158 C from serial no. xxxxxx-00752, RTC-159 A / RTC-159 B / RTC-159 C from serial no. xxxxxx-00319, RTC-187 A / RTC-187 B / RTC-187 C from serial no. xxxxxx-00001, RTC-250 A / RTC-250 B / RTC-250 C from serial no. xxxxxx-00174 and RTC-700 A / RTC-700 B / RTC-700 C from serial no. xxxxxx-00637

## 1.1 Warranty

This instrument is warranted against defects in workmanship, material and design for two (2) years from date of delivery to the extent that AMETEK will, at its sole option, repair or replace the instrument or any part thereof which is defective, provided, however, that this warranty shall not apply to instruments subjected to tampering or, abuse, or exposed to highly corrosive conditions.

THIS WARRANTY IS IN LIEU OF ALL OTHER WARRANTIES WHETHER EXPRESS OR IMPLIED AND AMETEK HEREBY DISCLAIMS ALL OTHER WARRANTIES, INCLUDING, WITHOUT LIMITATION, ANY WARRANTY OF FITNESS FOR A PARTICULAR PURPOSE OR MERCHANTABILITY. AMETEK SHALL NOT BE LIABLE FOR ANY INCIDENTAL OR CONSEQUENTIAL DAMAGES, INCLUDING, BUT NOT LIMITED TO, ANY ANTICIPATED OR LOST PROFITS.

This warranty is voidable if the purchaser fails to follow any and all instructions, warnings or cautions in the instrument’s User Manual.

If a manufacturing defect is found, AMETEK will replace or repair the instrument or replace any defective part thereof without charge; however, AMETEK’s obligation hereunder does not include the cost of transportation, which must be borne by the customer. AMETEK assumes no responsibility for damage in transit, and any claims for such damage should be presented to the carrier by the purchaser.

# 2.0 Safety instructions

## Read this manual carefully before using the instrument!

In order to avoid any personal injuries and/or damage to the instrument all safety instructions and warnings must be observed.

**The screen menus shown in this manual represent the menus displayed when using a B-version.**

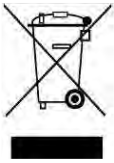

## Disposal – WEEE Directive

These calibrators contain Electrical and Electronic circuits and must be recycled or disposed of properly (in accordance with the WEEE Directive 2012/19/EU).

## Warning

### About the use:

- The calibrator **must not** be used for any purposes other than those described in this manual, as it might cause a hazard.
- The calibrator has been designed for **indoor use only** and is not to be used in wet locations.
- The calibrator is **not to be used in hazardous areas**, where vapour or gas leaks, etc. may constitute a danger of explosion.
- The calibrator is **not** designed for operation in altitudes above 2000 meters.
- The calibrator is a CLASS I product and must be connected to a mains outlet with a protective earth connection. Ensure the ground connection of the calibrator is properly connected to the protective earth before switching on the calibrator. Always use a mains power cable with a mains plug that connects to the protective earth.

- To ensure the connection to protective earth any extension cord used **must** also have a protective earth conductor.
- Only use a mains power cord with a current rating as specified by the calibrator and which is approved for the voltage and plug configuration in your area.
- Before switching on the calibrator make sure that it is set to the voltage of the mains electricity supply.
- **Always** position the calibrator to enable easy and quick disconnection of the power source (mains inlet socket).
- The calibrator **must** be kept free within an area of 20 cm on all sides and 1 metre above the calibrator due to fire hazard.
- After transport or storage in humid conditions or if the calibrator has not been heated up to minimum 100°C within the last 10 days, the instrument needs to be operated with a well temperature of at least 140°C for 2 hours before it can be assumed to meet all safety requirements of EN61010-1 (RTC-250/700 only).
- If the calibrator is wet or has been in a wet environment, do not apply power until the moisture has been removed for example by storage at 50°C in a low humidity environment for at least 4 hours.
- **Never** use heat transfer fluids such as silicone, oil, paste, etc. in the dry-block calibrators. These fluids may penetrate the calibrator and cause electrical hazard, damage or create poisonous fumes.
- The calibrator **must** be switched off before any attempt to service the instrument is made. There are no user serviceable parts inside the calibrator.
- When cleaning the well or the insertion tube, **REMEMBER** to wear goggles when using compressed air in the dry-block calibrator and cleaning oil in the liquid bath calibrator.
- Use protection shield when calibrating at high temperatures (RTC-700)
- The RTC-159 contains R-1270 and R-704 under pressure. The calibrator must **under no**

**circumstances** be stored at ambient temperatures above 50°C (122°F) or operated at ambient temperatures above 40°C (104°F). Doing so may cause a hazard.

### About the front panel:

- For B and C versions only, the sockets on the input module must **NEVER** be connected to voltages exceeding 30V with reference to ground.
- Thermostats must **not** be connected to any other voltage sources during test.

### About insertion tubes, insulation plugs, well and sensor:

- **Never** leave hot insertion tubes which have been removed from the calibrator unsupervised – they may constitute a fire hazard or personal injury.

  If you intend to store the calibrator in the optional carrying case after use, you **must** ensure that the instrument has cooled down to a temperature **below 100°C/212°F** before placing it in the carrying case.
- **Never** place a hot insertion tube in the optional carrying case.

### About the fuses:

- The fuse box must not be removed from the power control switch until the mains cable has been disconnected.
- The two main fuses must have the specified current and voltage rating and be of the specified type. The use of makeshift fuses and the short-circuiting of fuse holders are prohibited and may cause a hazard.

### About the liquid bath (RTC-158/250 A/B/C only):

- For liquid bath ensure that the sensor is absolutely clean and dry as a few drops of water in the well (liquid baths) might cause a steam explosion.
- **Do not pour** cold fluid into a hot well – it might cause an explosion.

- AMETEK Denmark A/S **does not** take any responsibility, if the well is filled with other fluids than those recommended.
- Liquid baths should **only** be operated by trained personal.
- Heat transfer fluids must **only** be used in calibrators prepared as a liquid bath. If these fluids are heated above specified temperature they will create noxious or toxic fumes. Proper ventilation must be used.
- To avoid hazards from treating fluids in a wrong manner, **always** reduce the "Max. SET-temperature allowed" in the CALIBRATOR SETUP MENU according to the specifications of the fluid to be used.

  If using a calibrator outside of the fluids specifications there is a risk of fire hazards, personal Injury or chemical release.

  By reducing the "Max. SET-temperature allowed", the calibrator cannot be used outside this temperature range.

  Be aware of the flash point, the boilling point and other fluid properties applicable to the usage when setting the Max. SET-temperature. Read the MSDS (Material Safety Data Sheet) of the liquid before use. The Max. SET-temperature must never exceed (liquid flash point – 50°C).
- **Always** remove the liquid from the calibrator before transportation.
- Product information on the fluid must be carefully investigated before use.
- **Do not** handle hot fluid.
- If the oil is heated beyond the flash point, it may constitute a fire hazard.
- **Do not pour** water or any other fluids into a bath filled with hot oil, because only a few drops of water might cause a steam explosion, if poured into above 100°C hot oil.
- **Do not** under any circumstances pour water on burning oil. It might cause a dangerous steam explosion.

## Caution – Hot surface

This symbol is engraved in the grid plate.

- **Do not touch** the grid plate, the well or the insertion tube when the calibrator is heating up – they may be very hot and cause burns.
- **Do not touch** the lid or the spill tray when the calibrator is heating up – they may be very hot and cause burns (RTC-158/250 A/B/C only).
- **Do not touch** the tip of the sensor when it is removed from the insertion tube/well – it may be very hot and cause burns.
- **Do not touch** the handle of the calibrator during use – it may be very hot and cause burns.
- **Over 50°C/122°F**

  If the calibrator has been heated up to temperatures above 50°C/122°F, you must wait until the instrument reaches a temperature **below 50°C/122°F** before you switch it off.
- **Do not** remove the insert from the calibrator before the insert has cooled down to less than 50°C/122°F.

## Caution – Cold surface

**Below 0°C/32°F**
**(applies only to the RTC-156/157/158/159/187 A/B/C models)**

- **Do not** touch the well or insertion tube when these are below 0°C/32°F - they might create frostbite.
- If the calibrator has reached a temperature below 0°C/32°F, ice crystals may form on the insertion tube and on the well. This, in turn, may cause the material surfaces to oxidize.

  To prevent this from happening, the insertion tube and the well must be dried. This is done by heating up the calibrator to min. 100°C/212°F until all water left has evaporated.

Remove the insulation plug while heating up.

It is very important that humidity in the well and insertion tube is removed to prevent corrosion and frost expansion damages.

## Caution…

### About the use:

- **Do not** use the instrument if the internal fan is out of order.
- Before cleaning the calibrator, you **must** switch it off, allow it to cool down and remove all cables.

### About the liquid bath (RTC-158/250 A/B/C only):

- Be careful **not to overfill** the well with oil.
- Avoid getting silicone oil on the clothes. It is impossible to wash off.
- The oil level rises several centimetres when the temperature is rising. Please read instructions in section 3.3.2 about oil level. To stop overflow switch off the main power and the oil level will decrease when cooled down.
- Carefully wipe off all silicone oil from the sensor under test to avoid spreading of the silicone oil.
- Be careful to select the right oil for the right task. Using other than the recommended oils might cause damage to the calibrator or degrade the performance.
- Remove excess hot fluid with the outmost care, as it might be very hot.
- **Do not** attempt to remove hot fluid with the liquid drainage tube, as it might melt.

### About the well, insertion tube and sensor:

- The well and the insertion tube **must** be clean and dry before use.
- **Do not** pour any form of liquids into the well. It might damage the well or cause a hazard.
- **Do not** use any alkali, acid or ionic fluids in the aluminium well as it might be damaged.

- Scratches and other damage to the insertion tubes should be avoided by storing the insertion tubes carefully when not in use.
- The insertion tube must **never** be forced into the well. The well could be damaged as a result, and the insertion tube may get stuck.
- **Before** using new insertion tubes for the calibration, the insertion tubes **must** be heated up to maximum temperature – 250°C (482°F) / 700°C (1292°F) - for a period of minimum 30 minutes (RTC-250/700 A/B/C only).
- The insertion tube must **always** be removed from the calibrator after use.
  The humidity in the air may cause corrosion oxidation on the insertion tube inside the instrument. There is a risk that the insertion tube may get stuck if this is allowed to happen.
- If the calibrator is to be transported, the insertion tube **must** be removed from the well to avoid damage to the instrument.
- The tip of the sensor should rest at the bottom of the sensor basket for optimum results (liquid baths only).
- Be careful **not to** submerge the handle or wire inlet of the sensor-under-test in the fluid, as this might damage the sensor (liquid baths only).

## Note…

The product liability **only** applies if the instrument is subject to a manufacturing defect. This liability becomes void if the user fails to follow the instructions set out in this manual or uses unauthorized spare parts.

# 3.0 Setting up the calibrator

## 3.1 Receipt of the calibrator

**When you receive the instrument…**

- Carefully unpack and check the calibrator and the accessories.
- Check the parts against the list shown below.

  If any of the parts are missing or damaged, please contact the dealer who sold the calibrator.

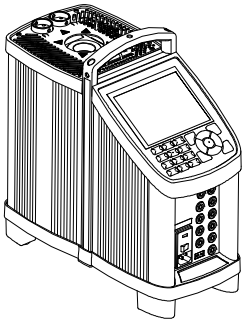

**You should receive:**

- 1 calibrator

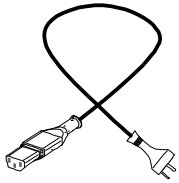

- 1 mains cable

- 2 sets of test cables (2 black, 2 red – B versions only)

- 1 USB key containing software package “JOFRACAL” and reference manual

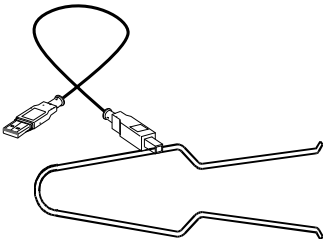

- 1 USB cable

- 1 tool for insertion tube

- 1 traceable certificate (A versions)

- 2 traceable certificates (C versions)

- 3 traceable certificates (B versions)

- 1 set of rubber cones for insulation plugs (RTC-156/157/158/159/187/250 only)

- 1 insulation collar (RTC-156 only)

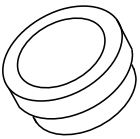

- 1 heat shield (RTC-700 only)

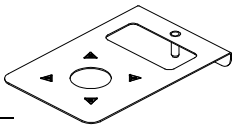

## Caution

**Do not use** the RTC-158 insulation plug (black POM) with the RTC-250 instrument due to the risk of melting.

**Always** use the correct - yellow/brown PEEK - insulation plug with the RTC-250 instrument.

RTC-158/250 A/B/C only (liquid bath) - OPTIONAL

- 1 liquid bath kit consisting of :
    - 1 sensor basket
    - 2 lids for transportation / calibration
    - 1 stirring magnet
    - 1 stirring magnet remover
    - 1 liquid drainage syringe
    - 1 bottom shield
    - 1 silicone oil
    - 1 oil material safety data sheet

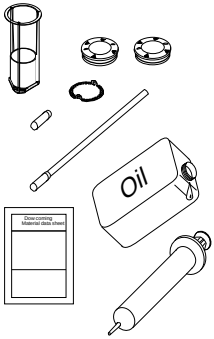


When reordering, please specify the part numbers found in the list of accessories, chapter 9.0.
Optional parts can also be found in the list of accessories.

## 3.2 Preparing the dry-block calibrator

### Warning

- The calibrator **must not** be used for any purposes other than those described in this manual, as it might cause a hazard.
- The calibrator has been designed for **indoor use only** and is not to be used in wet locations.
- The calibrator is **not to be used in hazardous areas**, where vapour or gas leaks, etc. may constitute a danger of explosion.
- The calibrator is **not** designed for operation in altitudes above 2000 meters.
- The calibrator is a CLASS I product and must be connected to a mains outlet with a protective earth connection. Ensure the ground connection of the calibrator is properly connected to the protective earth before switching on the calibrator. Always use a mains power cable with a mains plug that connects to the protective earth.
- To ensure the connection to protective earth any extension cord used **must** also have a protective earth conductor.
- Only use a mains power cord with a current rating as specified by the calibrator and which is approved for the voltage and plug configuration in your area.
- Before switching on the calibrator make sure that it is set to the voltage of the mains electricity supply.
- **Always** position the calibrator to enable easy and quick disconnection of the power source (mains inlet socket).

  The calibrator **must** be kept free within an area of 20 cm on all sides and 1 metre above the calibrator due to fire hazard.

- After transport or storage in humid conditions or if the calibrator has not been heated up to minimum 100°C within the last 10 days, the instrument needs to be operated with a well temperature of at least 140°C for 2 hours before it can be assumed to meet all safety requirements of EN61010-1 (RTC-250/700 only).
- If the calibrator is wet or has been in a wet environment, do not apply power until the moisture has been removed for example by storage at 50°C in a low humidity environment for at least 4 hours.
- The RTC-159 contains R-1270 and R-704 under pressure. The calibrator must **under no circumstances** be stored at ambient temperatures above 50°C ( 122°F) or operated at ambient temperatures above 40°C (104°F). Doing so may cause a hazard.

**Note…**

The instrument must **not** be exposed to draughts.

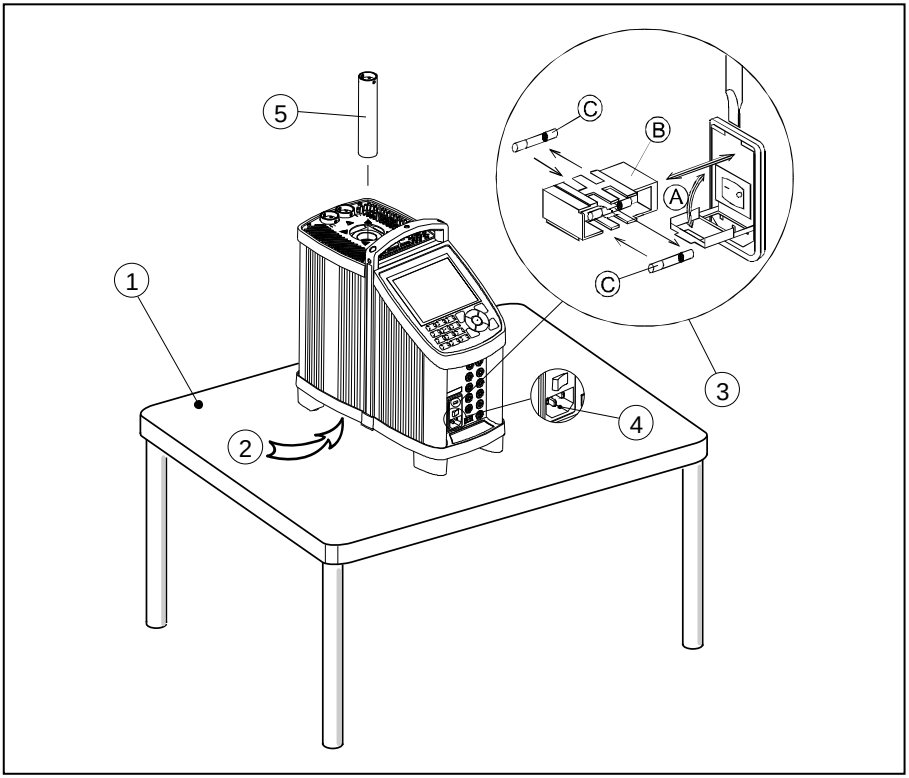


Fig. 1

### 3.2.1 When setting up the dry-block calibrator, you must…

① Place the calibrator on an even horizontal surface where you intend to use it.

**Caution…**

- **Do not** use the instrument if the internal fan is out of order.

② Ensure a free supply of air to the internal fan located at the bottom of the instrument.
The area around the calibrator should be free of draught, dirt, flammable substances, etc.

③ Check that the fuse size corresponds to the applied voltage on. The fuse is contained in the power control switch (on/off switch). To check; do as follows (see fig. 1):

## Warning

The two main fuses must have the specified current and voltage rating and be of the specified type. The use of makeshift fuses and the short-circuiting of fuse holders are prohibited and may cause a hazard.

**A.** Open the fuse box lid using a screwdriver.

**B.** Take out the fuse box.

**C.** Remove both fuses replacing them with two new fuses. These must be identical and should correspond to the line voltage. See chapter 9.0.

**B.** Slide the fuse box back into place.

④ Check that the earth connection for the instrument is present and attach the cable.

⑤ Select an insertion tube with the correct bore diameter. See section 3.2.2 for information on how to select insertion tubes.

The calibrator is now ready for use.

### 3.2.2 Choice of insertion tube

**Caution…**

To get the best results out of your calibrator, the insertion tube dimensions, tolerance and material are critical. We highly advise using the JOFRA insertion tubes, as they guarantee trouble free operation. Use of other insertion tubes may reduce performance of the calibrator and cause the insertion tube to get stuck.

**Caution…**

**Before** using new insertion tubes for calibration in the RTC-250/700 instruments, the insertion tubes **must** be heated up to maximum temperature 250°C (482°F) / 700°C (1292°F) - for a period of minimum 30 minutes.

Insertion tubes are selected on the basis of the diameter of the sensor to be calibrated.
Use the table for insertion tubes in chapter 9.0 to find the correct part number.

Alternatively, you may order an undrilled insertion tube and drill the required hole yourself. The finished dimensions should be as follows:

- Sensor diameter +0.2mm +0.05/-0
- DLC hole : Ø3.1mm +0.05/-0 (RTC-156/157/158/159/187/250 A/B/C)
  Ø4.2mm +0.05/-0 (RTC-700 A/B/C)
- Reference sensor holes : Ø4.2mm +0.05/-0 and Ø6.55mm +0.05/-0

For RTC-156/157/158/159/187 A/B/C only:

In order to get optimum results and prevent ice from building up in the well of the cooling calibrators, a proper sized insulation plug must be placed over the well during the calibration process.

The holes in the plug must have a tight fit and unused holes must be covered using e.g. silicone plugs (spare part no. 126280).

### 3.2.3 Inserting the sensors

Before inserting the sensors and switching on the calibrator, please note the following important warning:

## Warning

**Never** use heat transfer fluids such as silicone, oil, paste, etc. in the dry-block calibrators. These fluids may penetrate the calibrator and cause electrical hazard, damage or create poisonous fumes.

Insert the sensors as shown in fig. 2.

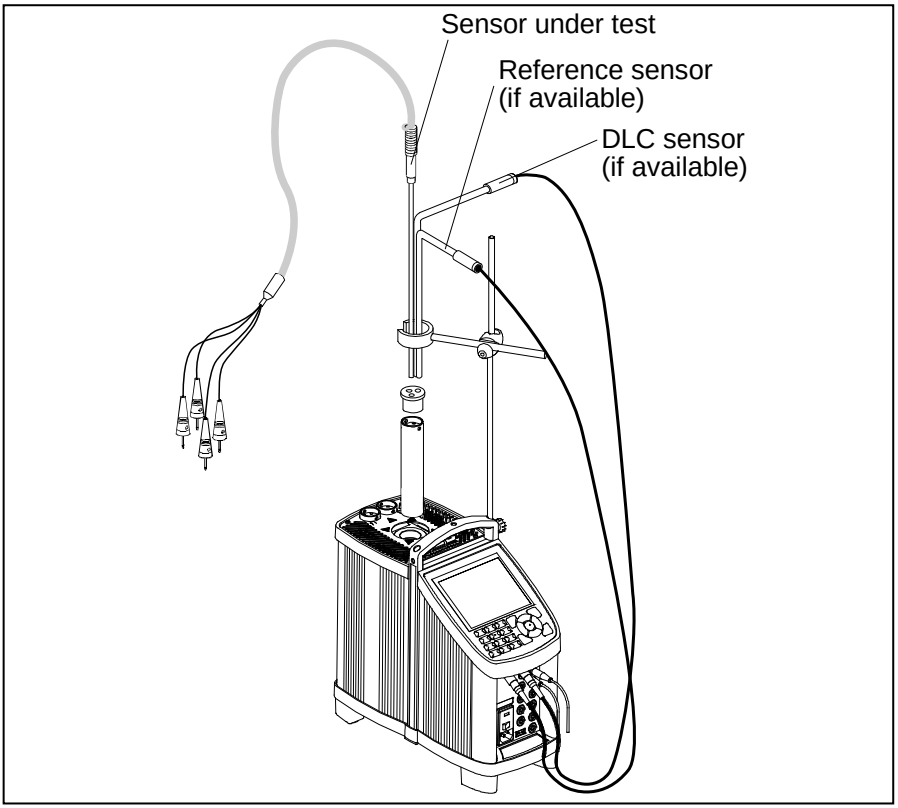


Fig. 2

The DLC sensor must be placed in the hole that is intended for the DLC sensor. Standard insertion tubes from AMETEK Denmark are

marked with a dot on the rim to indicate the placement of the DLC hole, and the insulation plugs are marked with the letter D (RTC-156/157/158/159/187/250 A/B/C only). See fig. 3.

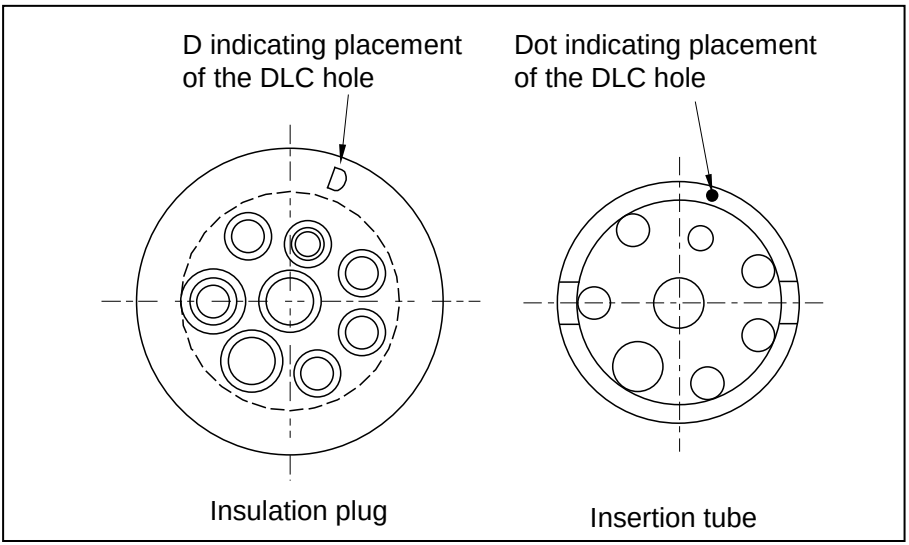


Fig. 3

## Caution…

- The well and the insertion tube **must** be clean before use.
- Scratches and other damage to the insertion tubes should be avoided by storing the insertion tubes carefully when not in use.
- The insertion tube must **never** be forced into the well. The well could be damaged as a result, and the insertion tube may get stuck.

## Caution – Hot surface

- **Do not touch** the grid plate, the well or the insertion tube while the calibrator is heating up – they may be very hot and cause burns.
- **Do not touch** the tip of the sensor when it is removed from the insertion tube – it may be very hot and cause

burns.

- **Do not touch** the handle of the calibrator during use – it may be very hot and cause burns.
- **Do not** remove the insert from the calibrator before the insert has cooled down to less than 50°C/122°F.

### Caution – Cold surface

- If the calibrator has reached a temperature below 0°C/32°F, ice crystals may form on the insertion tube and on the well. This, in turn, may cause the material surfaces to oxidize.
  To prevent this from happening, the insertion tube and the well must be dried. This is done by heating up the calibrator to min. 100°C/212°F until all water left has evaporated.
  Remove the insulation plug while heating up.

  It is very important that humidity in the well and insertion tube is removed to prevent corrosion and frost expansion damages.
- **Do not** touch the well or insertion tube when these are below 0°C/32°F – they might create frostbite.

## 3.3 Preparing the liquid bath calibrator (RTC-158/250 A/B/C only)

### Warning

- The calibrator **must not** be used for any purposes other than those described in this manual, as it might cause a hazard.
- The calibrator has been designed for **indoor use only** and is not to be used in wet locations.
- The calibrator is **not to be used in hazardous areas**, where vapour or gas leaks, etc. may constitute a danger of explosion.
- The calibrator is **not** designed for operation in altitudes above 2000 meters.
- The calibrator is a CLASS I product and must be

connected to a mains outlet with a protective earth connection. Ensure the ground connection of the calibrator is properly connected to the protective earth before switching on the calibrator. Always use a mains power cable with a mains plug that connects to the protective earth.

- To ensure the connection to protective earth any extension cord used **must** also have a protective earth conductor.
- Only use a mains power cord with a current rating as specified by the calibrator and which is approved for the voltage and plug configuration in your area.
- Before switching on the calibrator make sure that it is set to the voltage of the mains electricity supply.
- **Always** position the calibrator to enable easy and quick disconnection of the power source (mains inlet socket).
- Liquid baths should **only** be operated by trained personal.
- AMETEK Denmark A/S **does not** take any responsibility, if the well is filled with other fluids than those recommended.
- Heat transfer fluids must **only** be used in calibrators with a liquid bath. If these fluids are heated above specified temperature they will create noxious or toxic fumes. Proper ventilation must be used.
- Product information on the fluid must be carefully investigated before use.
- The calibrator **must** be kept free within an area of 20 cm on all sides and 1 metre above the calibrator due to fire harzard.
- After transport or storage in humid conditions or if the calibrator has not been heated up to minimum 100°C within the last 10 days, the instrument needs to be operated with a well temperature of at least 140°C for 1 hour before it can be assumed to meet all safety requirements of EN61010-1 (RTC-250/700 only).
- If the calibrator is wet or has been in a wet environment, do not apply power until the moisture has been

removed for example by storage at 50°C in a low humidity environment for at least 4 hours.

**Note…**

The instrument must **not** be exposed to draughts.

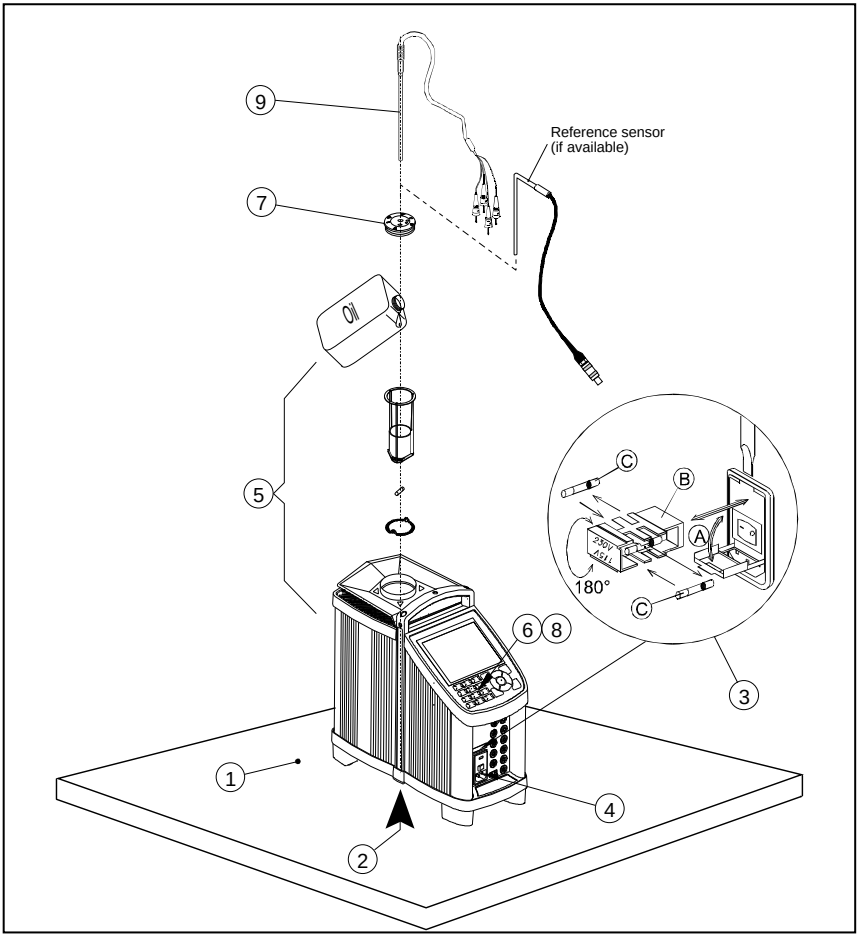


Fig. 4

### 3.3.1 When setting up the liquid bath calibrator, you must…

① Place the calibrator on an even horizontal surface where you intend to use it. Place it in a way that will minimize the risk of tilting.

## Caution…

- **Do not** use the instrument if the internal fan is out of order.
- The well **must** be clean before use.

② Ensure a free supply of air to the internal fan located at the bottom of the instrument.
The area around the calibrator should be free of draught, dirt, flammable substances, etc.

③ Check the voltage of the power control switch (on/off switch (230V/115V)). If the voltage of the power control switch differs from the line voltage, you must adjust the setting of the power control switch as follows (see fig. 4):

## Warning

The two main fuses must have the specified current and voltage rating and be of the specified type. The use of makeshift fuses and the short-circuiting of fuse holders are prohibited and may cause a hazard.

**A.** Open the fuse box lid using a screwdriver.

**B.** Take out the fuse box.

**C.** Remove both fuses and insert two new fuses. These must be identical and should correspond to the line voltage. See chapter 9.0.

**B.** Turn the fuse box 180° and slide it into place.

④ Check that the earth connection for the instrument is present and attach the cable.

⑤ Place the parts from the liquid bath kit in the well in the following order:

- **Bottom shield** – It is very important that the bottom shield is placed in the well before any calibration is attempted, as the bottom shield protects the well from being damaged during calibration.
- **Stirring magnet** – It is very important that the stirring magnet is in place and spinning before any calibration is attempted. The stirring magnet ensures minimum temperature gradient in the fluid. The magnets teflon cover will over time be worn down, leaving the magnet flat on one side. This will reduce the spinning ability. A magnet with a flat side must therefore be replaced.

- **Sensor basket** – It is very important to place the sensor basket in the well, as it ensures that the sensors encounter maximum temperature stability and ensures that the stirring magnet is not blocked.
- **Silicone oil** – Fill the well with oil according to the tables of recommended oil volume. The recommended volumes must be adjusted to the actual job.
  For oil tables and further oil information – see section 3.3.2.

  The sensor basket is marked with an optimum fluid level mark (100%). When filling the well with fluid and placing the sensors, this mark must **never** be exceeded.

## Warning

- **Do not pour** cold fluid into a hot well – it might cause an explosion.
- **Do not pour** water or any other fluids into a bath filled with hot oil, because only a few drops of water might cause a steam explosion, if poured into e.g. above 100°C hot oil.
- **Always** remove the liquid from the calibrator before transportation.

## Caution…

- Do not use any alkali, acid or ionic fluids in the aluminium well as it might be damaged.
- Be careful **not to overfill** the well with oil.
- The oil level rises several centimetres when the temperature is rising. Please read instructions in section 3.3.2 about oil level. To stop overflow switch off the main power and the oil level will decrease when cooled down.
- Remove excess hot fluid with the outmost care, as it might be very hot.
- **Do not** attempt to remove hot fluid with the liquid drainage syringe, as it might melt.

⑥ Start the stirring magnet by following the procedure in section 4.12.

⑦ Place the calibration lid onto the well. See section 3.3.3 for drilling information.

## Warning

To avoid hazards from treating fluids in a wrong manner, **always** reduce the "Max. SET-temperature allowed" in the CALIBRATOR SETUP MENU according to the specifications of the fluid to be used.
If using a calibrator outside of the fluids specifications there is a risk of fire hazards, personal Injury or chemical release.
By reducing the "Max. SET-temperature allowed", the calibrator cannot be used outside this temperature range.
Be aware of the flash point, the boilling point and other fluid properties applicable to the usage when setting the Max. SET-temperature. Read the MSDS (Material Safety Data Sheet) of the liquid before use. The Max. SET-temperature must never exceed (liquid flash point – 50°C).

⑧ Select a SET-temperature according to the tables of recommended oil volume by following the procedure in section 4.6.

## Warning

Ensure that the sensor is absolutely clean and dry, as a few drops of water might cause a steam explosion.

⑨ Place the sensor to be calibrated vertically into the well. It is recommended to use the optional support rod set for a correct position during calibration. See fig. 5.

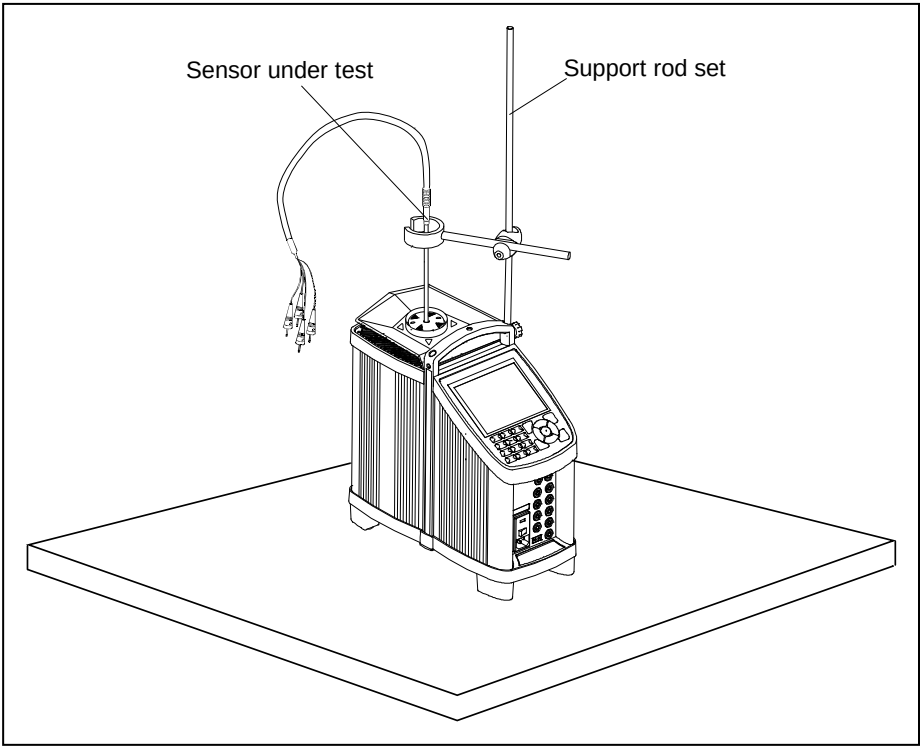


Fig. 5

## Caution…

- The tip of the sensor should rest at the bottom of the sensor basket for optimum results.
- Be careful **not to** submerge the handle or wire inlet of the sensor-under-test in the fluid, as this might damage the sensor.

⑩ The calibrator is now ready for use.

### 3.3.2 Selection of fluids

**Caution…**

Be careful to select the right fluid for the right task. Using other than the recommended fluids might cause damage to the calibrator or degrade the performance.

AMETEK Denmark A/S recommends DOW CORNING 200(R) oil 10cSt for sub zero temperatures to 158°C and DOW CORNING 200(R) oil 50cSt for ambient temperature to 250°C. Technical specifications for the liquid baths has been produced using the fluids mentioned above.

For proper handling, use and disposal of fluid – read fluid product information. When reading this information pay special attention to details regarding fume point, flash point, boiling point and point of decomposition.

When the fluid temperature approaches the fume point, it is necessary to use proper ventilation. An exhaust hood is recommended. When ventilation is applied take care not to expose the calibrator to alternating draft, as it might influent the temperature stability. If possible make the ventilation flow as constant as possible.

At low temperature the viscosity of the fluid can constitute a problem. When the viscosity becomes too low, the stirring magnet can’t provide proper circulation in the well to maintain temperature uniformity. Therefore it is essential to investigate the physical property of the fluid before one is selected.

**Tables of recommended oil level @23°C well temperature**

**RTC-250 A/B/C**

**For recommended 50 cSt oil**

| | |
|---|---|
| 0°C - 50°C | 100% |
| 50°C - 100°C | 95% |
| 100°C - 150°C | 90% |
| 150°C - 200°C | 85% |
| 200°C - 250°C | 80% |

**RTC-158 A/B/C**

**For recommended 10 cSt oil**

| | |
|---|---|
| -20°C - 50°C | 100% |
| 50°C - 100°C | 95% |
| 100°C - 120°C | 90% |
| 120°C - 155°C | 85% |

For the best result, the oil should be in good condition and free of foreign objects. If water is accumulated in the oil due to melted ice crystals – the oil must be dried out, by heating it up.

## Warning

- **Do not** handle hot fluid.
- If the fluid is heated beyond the flash point, it may constitute a fire hazard.

If the fluid has caught fire, switch off the main power to prevent further heating of the fluid. Flames are best extinguished by cowering the well with a non-flammable lid.

## Warning

**Do not** under any circumstances pour water on burning oil. It might cause a dangerous steam explosion.

### 3.3.3 Handling of lids

It is strongly recommended to leave the lid on during calibration. Calibration without the lid may affect the temperature stability and homogeneity.

To be able to use the lid for calibration, holes must be drilled in to it, in order to fit your calibration needs. If you use many different sizes of sensors more lids can be purchased at your JOFRA supplier.

It is advisable to drill the holes at the same size as the sensors plus 0,5mm and distribute the holes evenly over the lid.

### 3.3.4 Inserting the sensors

Be sure that the sensors can be calibrated in fluid. E.g. certain ceramic sensors might be destroyed.

**Caution…**

- The well and the insertion tube **must** be clean before use.
- Scratches and other damage to the insertion tubes should be avoided by storing the insertion tubes carefully when not in use.
- The insertion tube must **never** be forced into the well. The well could be damaged as a result, and the insertion tube may get stuck.
- Carefully wipe off all silicone oil from the sensor-under-test to avoid spreading of the silicone oil.

**Caution – Hot surface**

- **Do not touch** the lid or the spill tray when the calibrator is heating up – they may be very hot and cause burns.
- **Do not touch** the tip of the sensor when it is removed from the well – it may be very hot and cause burns.
- **Do not touch** the handle of the calibrator during use – it may be very hot and cause burns.
- **Do not** remove the insert from the calibrator before the insert has cooled down to less than 50°C/122°F.

## 3.4 Programming intelligent sensors

Use the configuration software CON050 supplied with RTC to program and to update calibration information in intelligent sensors.

For instructions read the software manual for CON050 installed on the USB key.

# 4.0 Operating the Calibrator

## 4.1 Standard connections

### Communication connections (all versions)

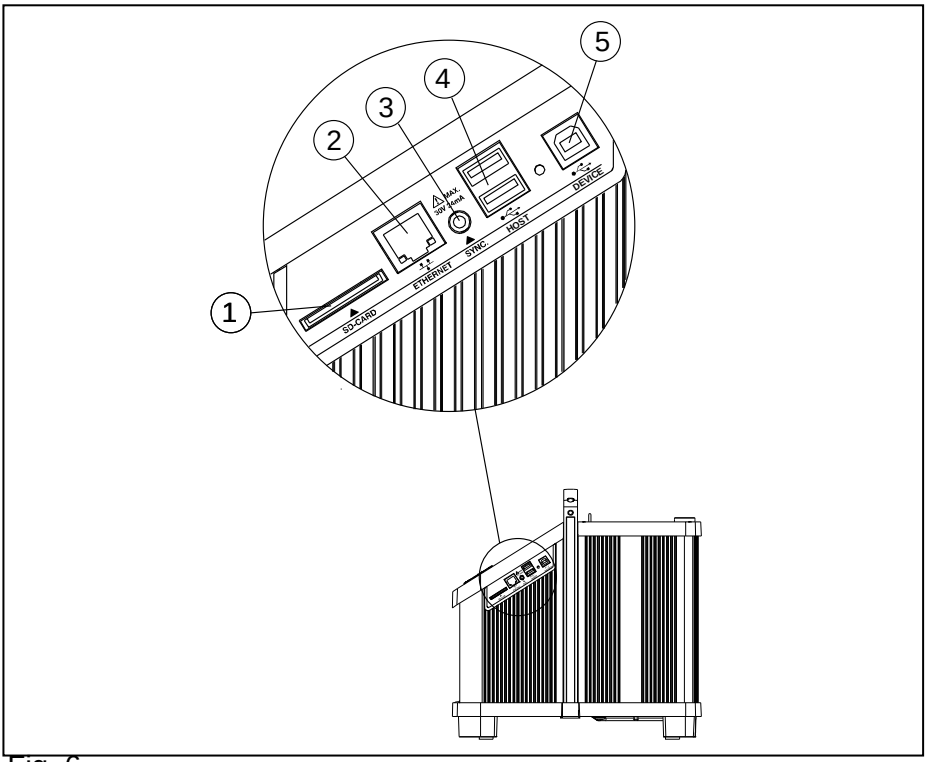


Fig. 6

| Pos. | Description |
|---|---|
| 1 | **SD-card**: SD/MMC card slot |
| 2 | **Ethernet**: Ethernet MAC 10/100 base-T, RJ45 |
| 3 | **Sync.**: Sync. Relay output, Max. contact load 30V 24mA, 3.5 mm Mini Jack<br>The state of the synchronization output is determined by the TRUE temperature (dependent on the choice of reference |
| **Pos.** | **Description** |

| | |
|---|---|
| | sensor) by the following guidelines:<br>1. When the extended stability time is = 0 minute, the relay is switched on for 2 seconds, when stability is achieved.<br>2. When extended stability time > 1 minute for the internal reference sensor (READ), the relay is switched on in the last minute of the extended stability time. |
| 4 | **Host**: USB 2.0 Double Host Port, 2 x USB A |
| 5 | **Device**: USB 2.0 Device Port, 1 x USB B |

## Standard connections (all versions)

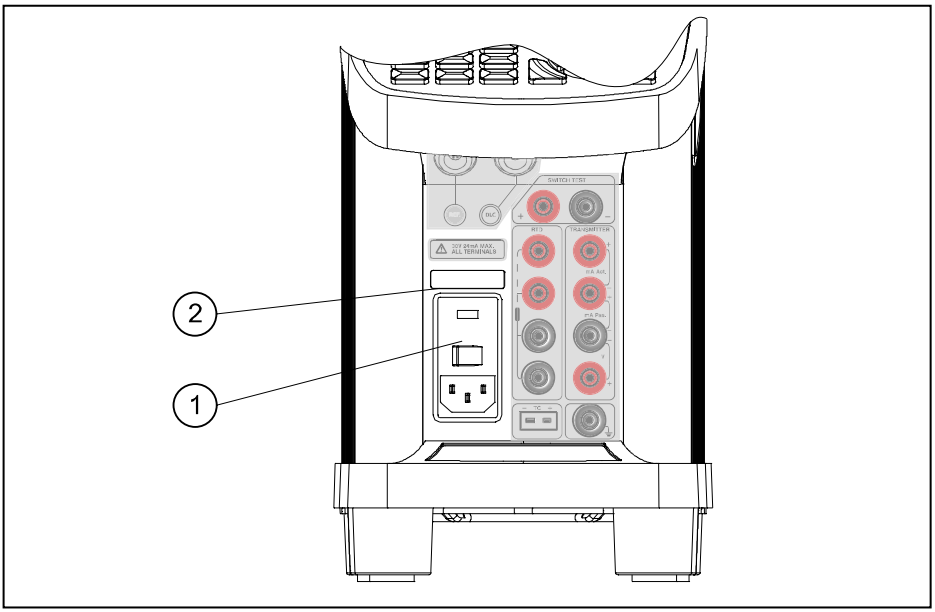


Fig. 7

| Pos. | Description |
|---|---|
| 1 | Power control switch with a cable connection and on/off switch. It also contains the main fuse. See section 6.0 for information on how to change the fuses. |
| 2 | Label indicating fuse value |

## 4.2 Input modules (B and C versions only)

### Warning

- The input terminals must **NEVER** be connected to voltages exceeding 30V with reference to ground.

**Description of sockets for external connections**

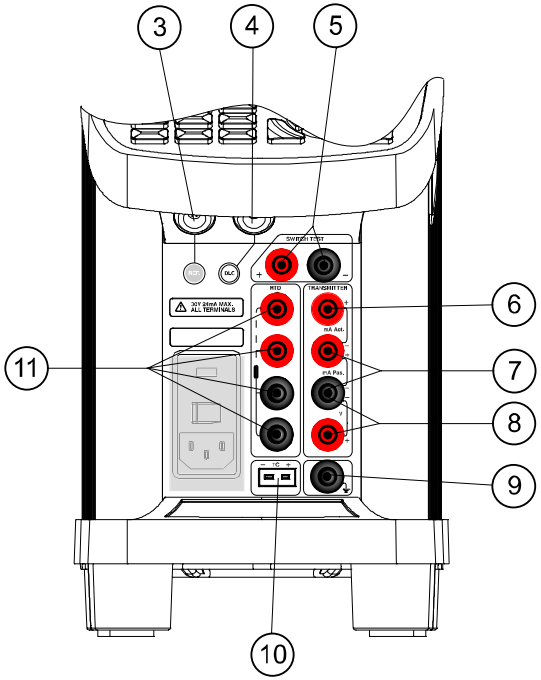


Fig. 8

| Pos. | Description |
|---|---|
| 3 | Input for reference sensor (B and C versions) |
| 4 | Input for DLC sensor (B and C versions) |
| 5 | Connection for thermostat switch test (B-version)<br>**Note** that this connection is for voltage free switches |

| Pos. | Description |
|---|---|
| 6 | 24V supply for active mA input (B-version) |
| 7 | Passive mA input (B-version) |
| 8 | Voltage input (B-version) |
| 9 | Connection to chassis (earth/ground) (B-version) |
| 10 | TC connection for thermocouples (B-version) |
| 11 | Input for RTD sensor (2, 3 or 4 wire) (B-version) |

One of the inputs either pos. **7**, **8**, **10** or **11** can be selected displaying the “SENSOR” temperature in the Setup and pos. **3** can be displayed as “TRUE” temperature.

**Note:** Only the sensor type, which is to be tested, should be connected to the input panel.

## 4.3 Keyboard and main screen display overview

### Keyboard

Fig. 9

| Keys | Description |
|---|---|
| | Full colour VGA display (main screen display information – see section 4.3.1) |
| 0 - 9 | NUMERIC KEYS to select menu options displayed in the horizontal and vertical menus and to type in values |
| ↺ | BACK KEY to cancel a selection/edit or return to previous menu. |
| ☰ | MENU KEY shows the vertical menu options listed. Can be displayed all through the process |
| ← | DELETE KEY deletes previous character |
| ↵ | ENTER KEY accepts selected options or entered values. When a value is entered with the ENTER KEY the cursor selects the next value field in the list. |

| Keys | Description |
|---|---|
| ▲ | ARROW KEYS have different functions depending on the mode of operation.<br>In navigation mode, they move the cursor in the desired direction.<br>In edit mode they roll in the list of options or if entering a number, the *ARROW left* and *ARROW right* move the cursor one character in the desired direction |
| ○ | ACTION KEY opens and closes edit fields or a menu button. The action key also accepts the selected option or entered value. |

## Main screen display

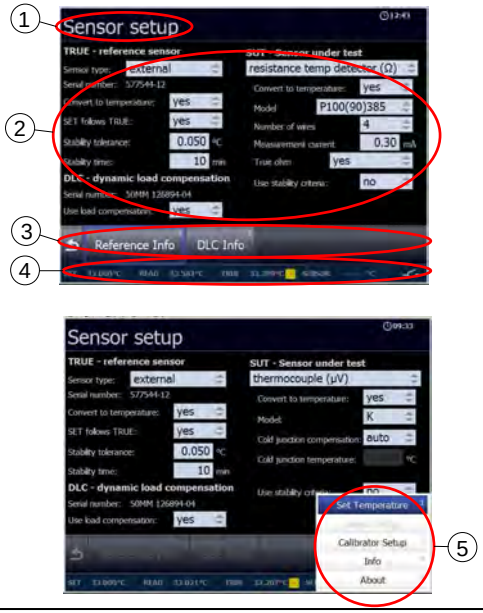


Fig. 10

The Main screen display is divided into four separate areas:

| Pos. | Description |
|---|---|
| 1 | **Heading**: Informs you of the current menu selected. |
| 2 | **Setup field**: Provides the bulk of setup data in the menu. This data can be changed by moving the cursor to the various fields. |
| 3 | **Horizontal menu**: Provides you with the relevant menu options that can be selected at the present point. Each option can be activated either by selecting and activating the option – or simply by pressing the numeric key that corresponds to the option number. |
| 4 | **Readings**: This reading line is always visible and informs you of the current readings. |
| 5 | **Vertical menu**: This menu can be activated throughout the entire calibration. The menu can be switched on and of in all stages of operating the calibrator. |

### 4.3.1 Main screen display information

The main screen gives an overview of the calibrator status and reads out the most relevant readings. In the Sensor Setup menu (see section 4.10) these readings can be changed.

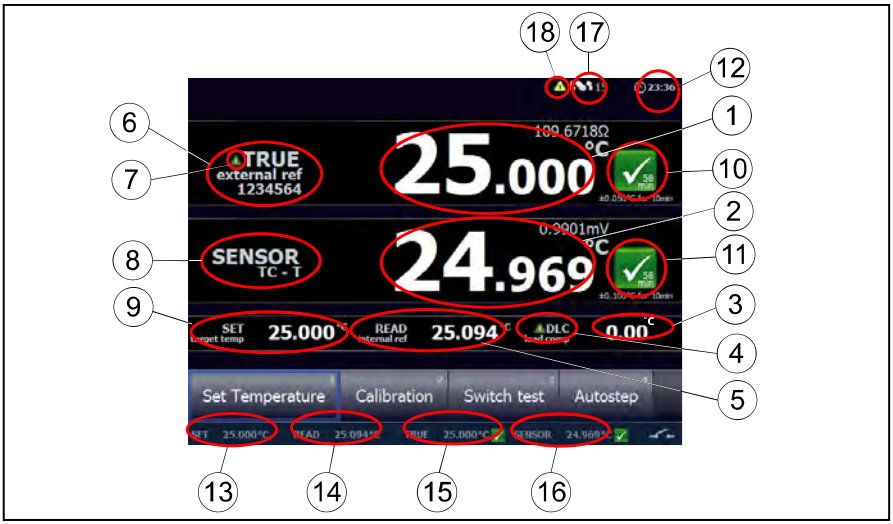


Fig. 11

| Pos. | Description |
|---|---|
| 1 | True temperature reading. Can be either the internal reference sensor or an external reference sensor. |
| 2 | SENSOR. Sensor Under Test value. |
| 3 | DLC sensor reading. Displays the measured temperature load of the insert –if the load compensation is active, the DLC system will control this value towards 0.00°C. |
| 4 | DLC compensation activated. The icon indicates, that the Dynamic Load Compensation function is active |
| 5 | READ value. The internal reference is always displayed as READ value. |
| 6 | Reference Sensor Info. The serial number of the external reference sensor is read from the intelligent reference sensor and displayed in this field. |

| Pos. | Description |
|---|---|
| 7 | Set follows True activated. The icon indicates, that the Set follows True function is active and will control the Temperature of the external reference sensor to the SET temperature. |
| 8 | Sensor Under Test Type. |
| 9 | SET temperature. |
| 10 | Stability indicator displays the status of the True temperature stability. Yellow symbol indicates that stability is not yet obtained. A timer counts down. A green symbol indicates that the stability criteria are obtained and the time of stability is displayed. When time of stability is more than 99 min., the time is no longer displayed in the symbol, but only in the info screen (see section 4.13). |
| 11 | Sensor Under Test Stability indicator. If Sensor under Test stability criteria is selected, a symbol will indicate the stability of the sensor under test as well as the True sensor. When both Sensor Under Test and True sensor are stable, the calibrator is considered being stable. |
| 12 | Real Time Clock display. |
| 13 | SET reading always visible. |
| 14 | READ value always visible. |
| 15 | TRUE value always visible. |
| 16 | SENSOR value always visible. |
| 17 | WARNING/ERROR symbol. The yellow icon indicates a warning. The red icon indicates an error. When the error symbol is displayed the calibration results cannot be saved. See section 6.1 for details concerning warnings and errors. |
| 18 | Stirrer activated/speed indicator. The icon indicates that the stirrer is activated and how fast it is spinning. |

### 4.3.2 Main screen temperature values

Two temperatures are always displayed:

- TRUE temperature: This is the reference temperature of the calibrator. In the A-version this is always the internal reference sensor. In B- and C-versions the TRUE temperature can either be the internal reference or the external reference.

- SET temperature: This is the target temperature for the well. SET temperature displays the last value entered. If no value has been entered previously, "---,---" is displayed.

Additional temperatures displayed (B versions only):

- SENSOR temperature: This is the temperature measured by the sensor under test (SUT).

Additional temperatures displayed (B and C versions only):

- Ext. TRUE temperature: This is the temperature measured by an external reference sensor. This is only displayed when an external reference sensor is used and replaces the internal reference.

### 4.3.3 Stability of temperature values

The stability of the TRUE and SENSOR temperatures are indicated by the following messages:

- "Not stable": Indicates that the measured temperature is not yet within the specified stability criteria.
- 4:32 Indicates "Time to stable": The temperature changes are within the specified stability criteria (see chapter 8.0) and states a time (in minutes and seconds) when the stable situation can be achieved.
- : Indicates that the “stable” situation is achieved.

- If External reference is selected as TRUE, the stability criteria will refer to this.

The criteria can be changed, however, if the temperature stability criteria is set wider or the stability time is set shorter, the calibrator may not reach the SET temperature.

- If “Use stability criteria” is set to “Yes” for the SENSOR, the automatic calibration function will continue to next temperature step only when both TRUE and SENSOR indicate stability.

## 4.4 Operating principle

The calibrator is operated using the horizontal and the vertical menu list.

The NUMERIC keys are used for selecting and activating the various menus and functions from both the horizontal and vertical menu lists.

The ◉ (ACTION key) and ↵ (ENTER key) are also used for selecting and activating the menus and functions and for accessing various parameters in setup fields.

The ▲ (ARROW keys) are used to move from menu item to menu item in the menu lists, to access various result lists, to scroll through various lists and to access setup fields.

### 4.4.1 Horizontal Menu

The horizontal menu options apply to the displayed screen. It is dynamically giving the relevant choices during operation. Each menu function can be activated in 2 ways:

☞ 1. Move the blue cursor with the ARROW key ▶ to mark the menu button on the screen. Then press ◉ or ↵ to activate the selection.

☞ 2. Whenever the menu is visible simply press the NUMERIC key.

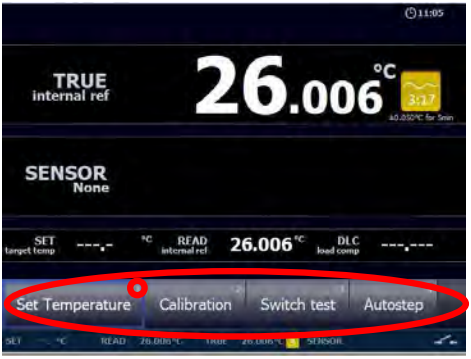


### 4.4.2 Vertical Menu

The vertical menu list can be called at any stage of operation making it possible to jump to the desired menu.

This allows you to jump to the most used menu easily - no matter where you are.

☞ Press the button to access the menu. To exit the menu, press the button again or (BACK).

This menu always gives the same options, however at some points some choices are not relevant and will therefore be shaded, i.e. you can not set a temperature, when an Auto step procedure is running.

Each menu function can be activated in 2 ways.

☞ 1. Move the cursor with the ARROW keys ▼ or ▲ to mark the menu field on the screen. Then press ◎ or ↵ to activate the selection.

☞ 2. When the menu is visible simply press the NUMERIC key.

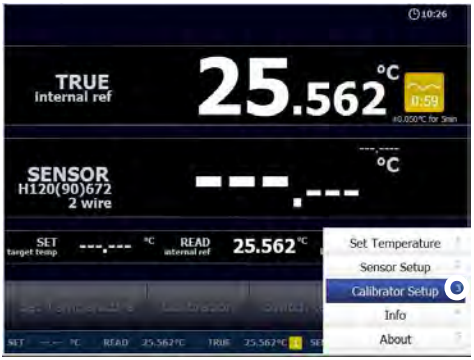


### 4.4.3 Parameter Fields

The setup menus have fields for parameter entries. When the setup is entered, then focus will be on the horizontal menu, and the function here can be activated.

☞ By pressing the ARROW UP key▲ focus will move from the horizontal menu to the parameter field area.

The parameter field area focus is indicated by

- The horizontal menu is now shaded
- The parameter field area has a blue frame
- The selected parameter field highlighted with a dark blue color

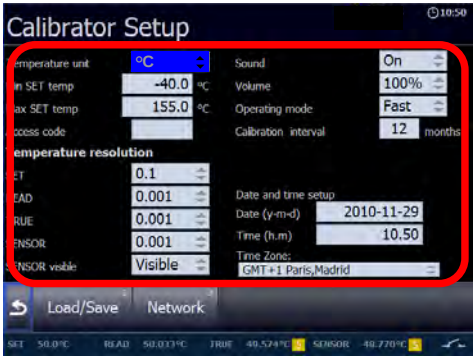


Use the 4 ARROW keys to move between the parameter fields.

A parameter value is changed by:

☞ - Pressing ◎ or ↵ to open the field for editing.

☞ - A numeric field can be entered directly without opening it first – simply enter the number.

When the parameter is entered press one of the keys:

☞ ◎ This enters the value and leaves the cursor on the parameter field.

☞ ↵ This enters the value and moves the cursor to the next parameter field.

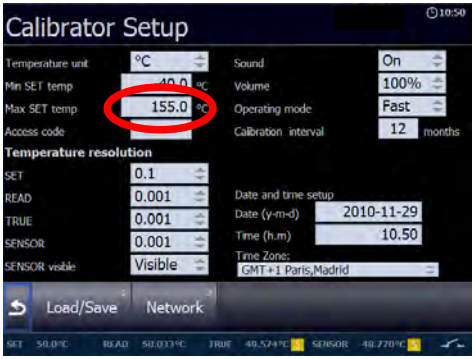


### 4.4.4 Working with lists

When it is possible to choose between a number of data sets, the data sets are presented in lists.

☞ As an example access the Calibrator Setup menu from the vertical menu and activate “Load/Save [1]”
A list of instruments settings will be displayed.

☞ Press ARROW UP ▲ to move the focus from the horizontal menu to the list.

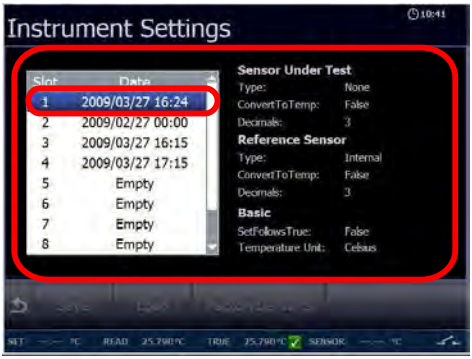


The selected data set in the list is now highlighted with a dark blue color.

☞ Scrolling in the list is done using the ARROW UP key ▲ and the ARROW DOWN key ▼.

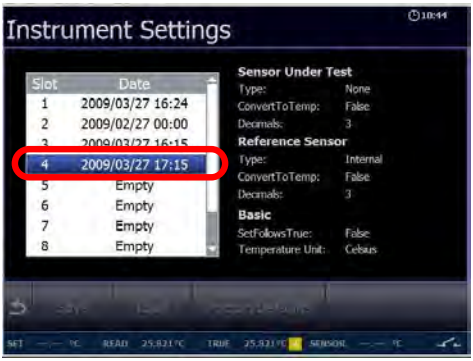

☞ When the desired dataset in the list is highlighted press ◎ or ↵ .

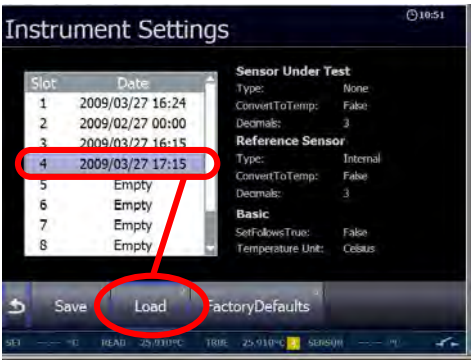


Now the horizontal menu will be in focus again and here you are able to decide what to do with the chosen dataset.

Activate the desired function in the horizontal menu. In this example the Instrument Settings from 2009/03/27 17:15 will be loaded from the memory into the active setup.

Some lists have no horizontal menus and only one option available.

☞ As an example access the Switch test menu by selecting “Switch test [3]” from the main menu and then activate “Results[2]”.

Scroll through the list using the ARROW UP key ▲ and the ARROW DOWN key ▼ and just press ◎ or ↵ to display the result of the highlighted dataset.

## 4.5 Starting the calibrator

Switch on the calibrator using the power control switch (pos. 1, fig. 7). A start up screen is displayed and then replaced with the main menu screen:

The functions in the horizontal menu are available using the soft keys or the arrow keys on the keyboard (see description in section 4.3).

## 4.6 Setting the temperature

☞ Access the Set Temperature function by selecting “Set Temperature [1] “.

☞ Use the NUMERIC keys to enter a new value, or ⊙ or ↵ to accept the value. When pressing the ACTION key or the ENTER key the calibrator returns to the main menu screen.

The Set temperature function can also be accessed using the vertical menu (press ☰). Through this menu a new set point value can be entered at any stage of the operation **except when one of the automatic functions are active.**

## 4.7 Calibration

### Note…

This Calibration function is for B versions only.

This function enables you to perform automatic calibrations of different temperature sensors. The calibration procedure is semi-automatic, using parameters and settings, which are defined in workorders. These workorders are created and edited using the "JOFRACAL" PC program. Multiple calibrations can be performed using the same workorder settings.

☞ Access the Calibration menu by selecting “Calibration [2]” from the main menu.

A Workorder List is displayed.

☞ Run the selected workorder by activating “Run [1] “. A new calibration is started.

You can also chose to activate:

“View [2]” – shows the setting of the workorder.

“Results [3]” – shows the previous calibration results from this workorder.

“Delete [4]” – deletes the workorder setting and the results.

For operating the Results menu see section 4.7.2.
For operating the View menu see section 4.7.3.
For operating the Delete function see section 4.7.4.

## Note…

Calibration information is available in several places throughout the calibration menus. The content of this information is described in section 4.7.3.

### 4.7.1 Running a calibration

☞ To run the calibration, select “Run [1] “ from the Workorder List menu.

If the serial number of the reference sensor used for calibration does not match the one specified in the workorder the following message is displayed :

If you proceed, the connected reference sensor will be documented along with the results.

If you do not wish this message to appear, the correct reference sensor must be specified when the workorder is edited using the “JOFRACAL” PC program.

☞ Choose “YES” and press ⊙ or ↵ if you want to proceed with the calibration.

The Parameter setup menu is displayed.

## Note…

If the sensor under test is a thermocouple sensor and the manual compensation mode is selected in work orders, a cold junction temperature must be defined.

The parameters in the workorder can be edited.

## Note…

- Only numeric data can be entered.
- The BACK key ↩ cancels a selection/edit or returning to previous menu. The ESC key can be used throughout the process.

☞ Select “Next [1] “ to proceed with the operation.

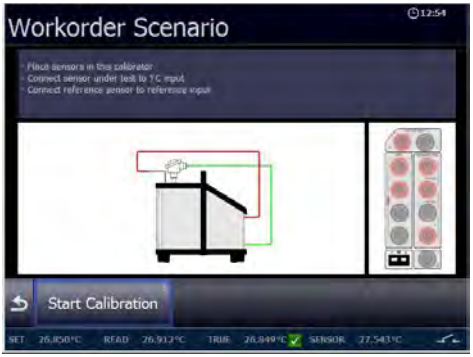


A workorder Scenario is displayed, giving a graphical display of the setup and sensor connections.

☞ Start the calibration by selecting “Start Calibration [1]”.

The Calibration Running step 1 of 2 is started and the temperature is heading towards step 1.

The following screen is displayed :

When the temperature has reached the stable criteria, the calibration data will be stored and the temperature goes towards the next set temperature.

If the workorder contains manual reading during calibration, you will be asked to enter the Sensor Under Test temperature before that.

The following screen is displayed :

If manual readings are specified these will have to be entered before next step starts.

## Note…

The calibration can be stopped at any time by activating “Stop [2]”, but this will erase the calibration results.

During calibration several other functions are available:

“Result [1]” - To view the calibration results (no editing is possible).

“Pause [3]” - To pause the calibration.

“Prev [4]” - Force the calibration to jump a step backwards to the previous calibration screen regardless of the calibration stability.

“Next [5]” - Force the calibration to jump a step forwards to the next calibration screen regardless of the calibration stability. This will leave the current step without saving calibration results.

“View [6]” - To view the workorder settings.

When the calibration has completed a green check ✓ is shown on the screen and the Calibration Result follows quickly hereafter.

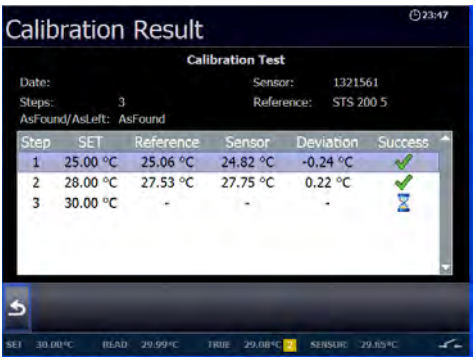


☞ Select “Save [1]” to store the results in the calibrator

or

☞ select “Discard [2]” and press “Yes” to delete the calibration results or “No” to return to the Calibration Result screen.

A full Calibration Result List can be viewed using the instructions in section 4.7.2.

### 4.7.2 Viewing calibration results

☞ Access the Calibration Result function by selecting “Results [3]” from the Workorder List menu.

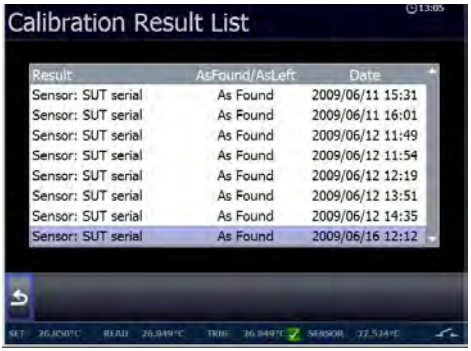


A full Calibration Result List is displayed.

☞ Select a workorder to be displayed showing the calibration details for the specific workorder.

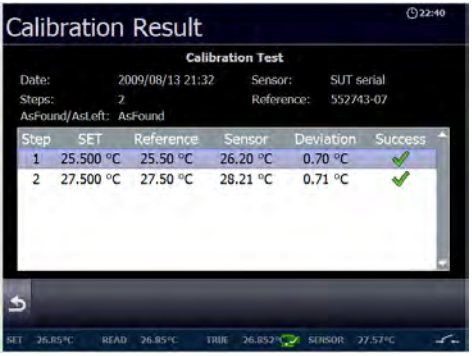


☞ The calibration results can be uploaded with the “JOFRACAL” PC program. This enables you to print out the results on a certificate.

☞ Press ⮌ to exit the Calibration Result List and return to the Workorder List menu.

### 4.7.3 Displaying calibration information

Calibration information is defined within the work orders created on the PC using "JOFRACAL".

☞ Access the Workorder Sensors menu by selecting “View [2]” from the Workorder List menu,

The Workorder Sensors menu is displayed.

This screen gives you an overview of the workorder sensor setup including a summary of Notes, Scenario and Steps. Each of these can be displayed in details

☞ Select “Notes [1]” to access the Notes function.

A list of Workorder Notes is displayed.

The notes are information entered via the PC program, when the workorder is created.

☞ Press ⮌ to exit the Workorder Notes screen.

☞ Select “Scenario [2]” to access the Scenario function.

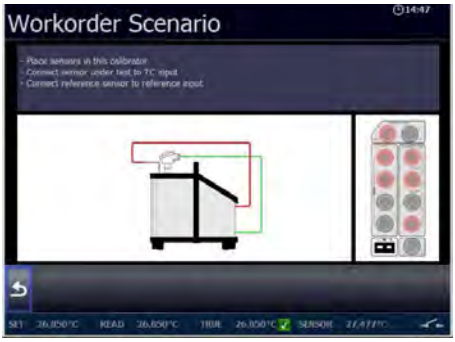


A Workorder Scenario is displayed.

The calibration set up is shown in a graphic format, and the active sensor input is marked. The parameters for this setup are defined in the work order created using the PC program.

☞ Press ⮌ to exit the Workorder Scenario screen.

☞ Select “Steps [3]” to access the Step function.

A list of Temperature Steps is displayed.

This function shows the pre-defined temperature steps for the calibration.

☞ Press ⮌ to exit the Step function and return to the Workorder Sensors menu.

### 4.7.4 Deleting workorders

It is possible to delete a workorder using the Delete function from the Workorder List menu.

☞ Select “Delete [4]” to access the Delete function.

☞ Press “Yes” if you want to delete your workorders and “No” if you want to exit the Delete function without deleting anything.

## Warning

If you choose to delete a workorder, the whole workorder including the calibration results will be deleted.

☞ Press ⮌ to exit the Workorder List menu and return to the main menu.

## 4.8 Switch test menu

**Note…**

This Switch test function is for B versions only.

Switch test automatically locates the switch temperatures of a thermostat.

Three parameters are required:

- Start temperature ($T_1$)
- End temperature ($T_2$)
- Rate of change in temperature (slope rate).

Hysteresis of a thermostat can also be determined here. Where the hysteresis determines the tolerence between the upper switch temperature and the lower switch temperature of the thermostat.

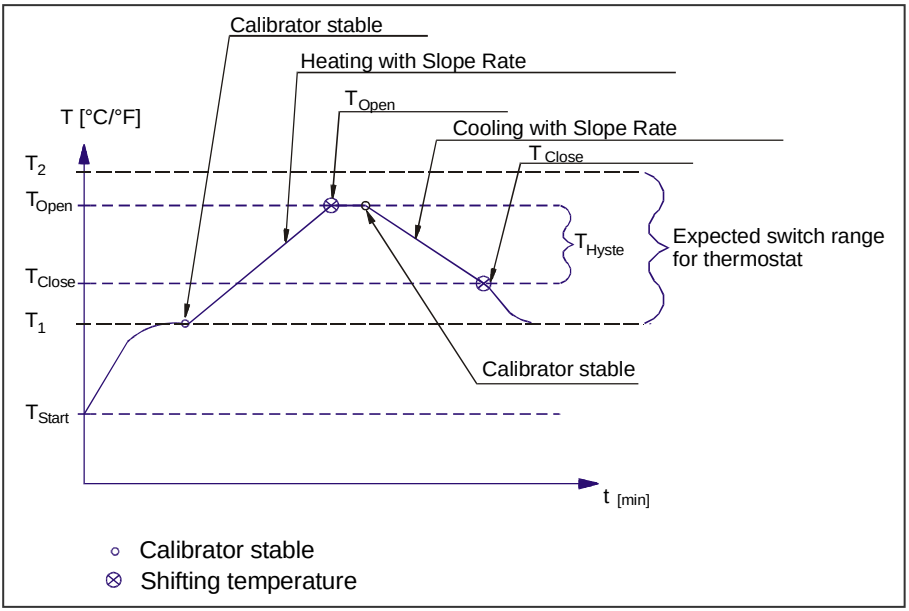


Fig. 12

### 4.8.1 Running a switch test

☞ Access the Switch test menu by selecting “Switch test ³” from the main menu.

A Switch test setup menu is displayed.

The small graph illustrates the current $T_1$, $T_2$ and hysteresis selections. Note that $T_1$ can be greater than $T_2$.

☞ Access the setup field to edit the parameters:

- $T_1$ - first set temperature
- $T_2$ - second set temperature
- Hysteresis - to determine hysteresis, toggle between "Yes" (a two-way-temperature measurement) and "No" (a one-way-temperature measurement).
- Slope rate - The permitted range is 0.1 - 9.9°C/min. / 0.2 - 17.8°F/min.

**Note…**

the slope rate should be set so that the thermostat sensor can follow the temperature in the calibrator's well.

☞ Press ↩ to exit the setup function and return to the Switch test setup menu.

Before starting the switch test ensure that the switch is connected to the switch input (see page 40, pos. 6).

☞ Select “Start [1]” to start the switch test.

The Switch Test is now in progress.

While the switch test is in progress, 2 options are available:

“Result [1]” – displaying the current switch test results.
“Stop [3]” – stopping the switch test. Press “Yes” to stop the switch test and “No” to return to the Switch Test screen.

**The calibrator's switch test procedure**

1. Once the switch test is started, the calibrator starts working towards $T_1$ as quickly as possible. The calibrator's temperature changes (heating or cooling) and switch status are shown in the display.

2. When $T_1$ is achieved and the temperature is stable, the text and the graphic in the middle of the screen will change accordingly.

3. The calibrator now starts working towards $T_2$ at the specified slope rate.

4. In a normal situation, the thermostat changes state before $T_2$ is achieved. If $T_2$ is achieved and the temperature is stable, a red cross will be displayed instead of a green check ✓.

5. When hysteresis is not selected (single temperature change) (the graphic indicates the choice), the finished switch test result is displayed.

   When hysteresis is selected (two switch changes), the calibrator starts working towards $T_1$ at the specified slope rate.

6. Normally, the thermostat changes state before $T_1$ is achieved. If $T_1$ is reached and the temperature is stable, a red cross will be displayed instead of a green check ✓.

7. The finished switch test results are displayed.

### 4.8.2 Showing switch test results

Two types of switch test results are available:

- Results during a switch test.
- Results of a finished switch test.

## Results during a switch test

☞ Access the Switch Test Result List by selecting “Result [1]” from the Switch Test menu.

This shows the results that are currently available. These results change as the test progresses.

☞ Press ⮌ to return to the switch test.

## Finished switch test results

At the end of a switch test the results are displayed. These show the temperature when the thermostat has closed and the temperature when it has opened – whichever comes first. The difference between these 2 temperatures is calculated as the hysteresis.

☞ Select “Save [1]” to save the results storing them in the calibrator’s memory.

☞ Select “Discard [2]” to delete the results from the screen.

## Note…

A hysteresis result is only measured when hysteresis is set to “Yes”.

You will then automatically return to the Switchtest setup menu.

If no change in the switch position is registered during the test a red cross will be displayed in the Result list instead of a green check ✓.

☞ Delete the result by selecting “Discard [2]” or save the result by selecting “Save [1]”.

## To view stored switch test results

☞ Access the Switch Test Result List by selecting “Results [2]” from the Switch test setup menu.

☞ Select a test result to be displayed.

☞ Press ⮌ twice to return to the Switch test setup menu.

## 4.9 Auto step menu

Auto step is used to step automatically between a range of different calibration temperatures. This is useful when calibrating sensors in places that are difficult to reach and sensors where the output is displayed in a different location.

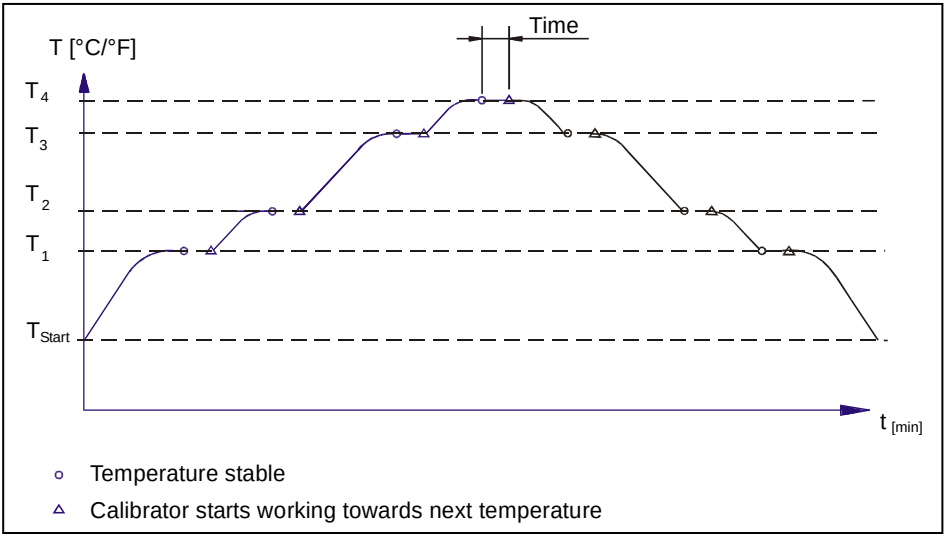


Fig. 13

### 4.9.1 Running an Auto step calibration

☞ Access the Auto Step Setup menu by selecting “Autostep [4]” from the main menu.

The Auto Step Setup menu is displayed.

☞ Access the Auto Step Setup to edit the parameters:

- **No of steps**: the number of temperature steps per direction ($T_1 \rightarrow T_x$) can be set using integers from 1 – 20. When a Two-way mode is selected, the same number of steps are used for the second direction ($T_x \rightarrow T_1$).
- **Mode**: toggle between “One-way” and “Two-way”.
- **Hold time**: defines the time (in minutes) the temperature is maintained (after it is stable) for each step.
- **T** step values: must be set within the sensors permitted range.

☞ Press ⮌ to exit the editor and return to the Auto Step setup menu.

☞ Access the Sensor setup menu by selecting “Next [1]” from the Auto Step Setup menu.

The Sensor setup menu is displayed. In this menu you have the opportunity to check and if necessary change the settings as described in section 4.10 – Sensor Setup menu.

☞ Select “Start [3]” to start the Auto Step calibration.

An Auto Step Running step screen is displayed.

While the step test is in progress, several functions are available:

“Result [1]” - To review the Auto Step results (no editing is possible).

“Stop [2]” - To stop the Auto Step test.

“Pause [3]” - To pause the test.

“Prev [4]” - Force the test to jump a step backwards to the previous running step regardless of the step’s stability.

“Next [5]” - Force the test to jump a step forwards to the next running step regardless of the step’s stability.

When the Auto Step test is complete the results are displayed.

☞ Select “Save [1]” to save the results storing them in the calibrator’s memory.

☞ Select “Discard [2]” to delete the results from the screen. The calibrator then returns to the Auto Step Setup menu.

### 4.9.2 Auto Step test results

At the end of an Auto Step test the results are displayed and stored in the calibrators memory.

The measured TRUE and SENSOR temperatures for each step are displayed.

## To view stored Auto step test results

☞ Access the Auto Step Result List by selecting “Results [2]” from the Auto Step Setup menu.

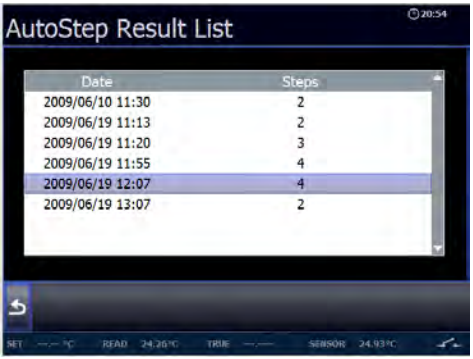


The Auto Step Result List is displayed.

☞ Select an auto step result to be displayed.

☞ Press ↩ twice to return to the Auto Step Setup menu.

## 4.10 Sensor Setup menu

☞ The Sensor Setup can be entered through the vertical menu (press ☰)
The Sensor Setup can also be edited immediately before running the Auto step (section 4.9.1) or when starting a switch test.

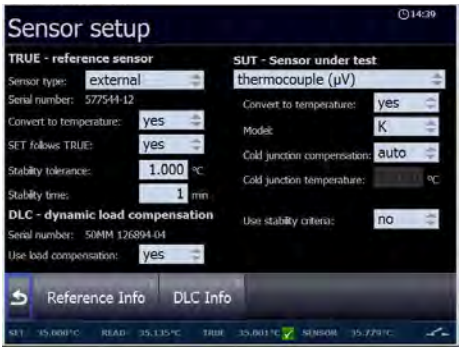


☞ Activate “Sensor Setup²”.

### 4.10.1 Setting the additional stability time (A version)

☞ Set the additional stability time by pressing ◎ and the NUMERIC keys. Stability time can be set (in minutes) using integers from 0 – 99.

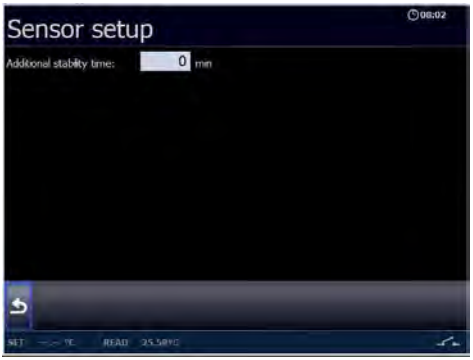

### 4.10.2 Setting the parameters for TRUE – reference sensor (B and C versions only)

**Sensor type:**

Internal reference source.

The internal reference sensor will be displayed as the TRUE value on the main screen.

The calibrator has a set of internal stability criteria it shall meet before stability is indicated. Additional stability time may be set beyond the internal stability criteria.

☞ Set the additional stability time by pressing ◎ and the NUMERIC keys. Stability time can be set (in minutes) using integers from 0 – 99.

External reference source

The TRUE value on the main screen will be read from the Intelligent Reference Sensor connected to the REF. INPUT on the front panel (see section 4.2 fig. 6). The calibrator automatically reads the calibration data and serial number of the Sensor.

**Convert to temperature:**

- “yes” sets the readout of the External reference as a temperature.
- “no” sets the readout of the External reference in Ω values.

**SET follows TRUE:**

This function enables you to reach the TRUE temperature measured by the External reference sensor.

## Note…

that when “yes” is selected, the calibrator will control the temperature to the TRUE temperature. This means that it could take longer time before the calibrator indicates stability.

The “SET follows TRUE” function is indicated with the symbol at the TRUE reading in the main display.

## Note…

SET follows TRUE is only relevant when the External reference sensor is displayed in temperature units.

**Stability tolerance:**

The Stability tolerance can be set down to ±0.001°. The tolerance should be set low enough to utilize the good temperature stability of the calibrator – however a low value also gives a longer time to be stable.

**Stability time:**

Stability time can be set from 1 – 99 minutes.

When the TRUE temperature has reached the specified Stability tolerance during the specified Stability time, then the stability indicator in the main screen will turn green.

☞ Press to accept the new setting(s) and return to the Sensor setup menu or continue to edit the DLC sensor parameters or the Sensor under test parameters.

### 4.10.3 Setting the parameters for DLC– dynamic load compensation (B and C versions only)

The DLC value on the main screen will be read from the Intelligent Load Sensor as soon as it is connected to the DLC INPUT on the front panel (see section 4.2 fig. 6). The calibrator automatically reads the calibration data and serial number of the Sensor.

However if the Dynamic Load Compensation shall be active, it must be enabled.

**Use load compensation:**

The active “DLC” function is indicated with the symbol ⚠ at the DLC reading in the main display.

**Note…**

always use external reference sensor when calibrating with the DLC-function activated for specified accuracy.

☞ Press ↩ to accept the new setting(s) and return to the Sensor setup menu or continue to edit the reference sensor parameters or the Sensor under test parameters.

### 4.10.4 Setting the parameters for SUT– Sensor under test (B versions only)

**Sensor type:**

☞ Choose between :

- thermocouple sensors (μV)
- voltage sensors (V)
- current (ma) sensors
- RTD sensors (resistance temp. detector (Ω))
- None (no sensor connected)

☞ Select a sensor.

The selected sensor and its list of parameters are now displayed. The various settings can be edited as described in the following :

**Convert to temperature:**

(using thermocouple, voltage, current and RTD)

- "yes" – the inputs are converted to temperatures.
- "no" – no conversion is made.
  When "no" has been selected the type of model is the only other parameter which can be altered.

**Model:**

(using thermocouple and RTD)

☞ Toggle between the models; K, N, R, S, T, U, B, E and J (thermocouple) or P10(90)385, P100(90)385, P100(90)392, P1000(90)385, P200(90)385, P50(90)385, P500(90)385, Pt-100 MILL, P100(90)391, P50(90)391, YSI-400, H120(90)672, M100(90)428, M50(90)428-06, M100(90)428… and M50(90)428 (RTD).

**Cold junction compensation:**

(using thermocouple)

- "auto" – when the automatic mode is selected, the calibrator measures the temperature in the T/C connector and uses this for the cold junction compensation of the thermocouple.
- "manual" – to define a manual temperature for cold junction compensation. Can be used when an external cold junction temperature can be established.

**Cold junction temperature:**

(using thermocouple)

☞ When "manual" Cold junction compensation has been selected the temperature for cold junction can be set using the NUMERIC keys.

**Voltage(V) and temperature(T) span:**
(using voltage)

The minimum and the maximum of the voltage and the corresponding temperature span can be set here.

☞ Use the NUMERIC keys to set the value of the voltage and/or the temperature.

**Current(C) and temperature(T) span:**
(using current)

The minimum and the maximum of the current and the corresponding temperature span can be set here.

☞ Use the NUMERIC keys to set the value of the current and/or the temperature.

**Number of wires:**
(using RTD)

The number of wires used for the sensor under test can be selected here.

☞ Choose between 2, 3 or 4 wires.

**Use stability criteria:**
(using thermocouple, voltage, current and RTD)

Beside the stability check on the Reference sensor, it is also possible to ensure that the Sensor Under Test (SENSOR) is stable before the temperature is indicated as stable.

- “yes” – Stability will be checked on both Reference sensor (TRUE) temperature and Sensor Under Test (SENSOR) temperature.
- “no” – Stability will be checked on Reference sensor (TRUE) temperature only.

**Stability tolerance:**
(using thermocouple, voltage, current and RTD)

☞ Enter the Stability tolerance (temperature) by pressing the NUMERIC keys.

The Stability tolerance can be set down to ±0.001° however the expected performance of the Sensor Under Test should be considered before setting the tolerance.

**Stability time:**

(using thermocouple, voltage, current and RTD)

☞ Set the Stability time by pressing the NUMERIC keys. Stability time can be set from 1 – 99 minutes.

When the SENSOR temperature has reached the specified Stability tolerance during the specified Stability time, then the stability indicator in the main screen will turn green.

### 4.10.5 Viewing the Reference and DLC data (B and C versions only)

The calibration data of the Intelligent Reference sensor and the intelligent DLC sensor can be viewed using the Reference Info function or the DLC Info function from the Sensor setup menu.

☞ View the Reference Info box by selecting “Reference Info [1]”.

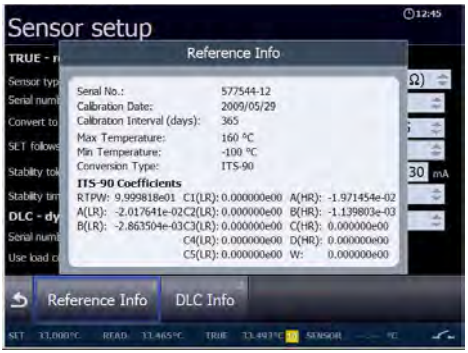


The Reference Info box is displayed.

☞ Press ⮌ to return to the Sensor setup menu.

☞

View the DLC Info box by selecting “DLC Info [2]”.

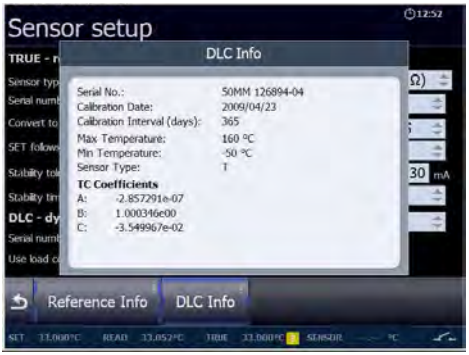


The DLC Info box is displayed.

☞

Press ⮌ to return to the Sensor setup menu.

## 4.11 Calibrator Setup menu

☞ The Calibration Setup can be edited through the vertical menu (press ☰ ).

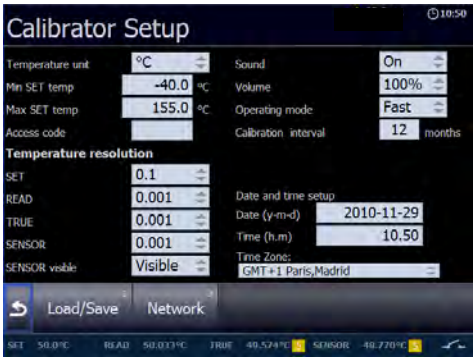


☞ Activate “Calibrator Setup³”.

### 4.11.1 Setting the temperature parameters

**Temperature unit:**

☞ Choose between:

- °C (Celsius)
- °F (Fahrenheit)
- K (Kelvin)

**Min SET temp / Max SET temp:**

☞ Enter the access code to get access to the editor.

☞ Use the NUMERIC keys to set the Min/Max SET temperature in Celsius, Fahrenheit or Kelvin.

## Note…

The Enter Access Code box is displayed every time you try to access the Min/Max SET temp parameters. Type in your access code and continue.

**Access code:**

The following features can be protected by an access code:

- Resetting the calibrator to Factory default settings.
- Setting the Min/Max SET Temperature.
- Editing the Access code while it is enabled.

☞ Press ◎ or ↵ to access the Access code function.

☞ Use the NUMERIC keys to type in a value from 0000 to 9999. Use all 4 digits.
Typing 0000 disables the Access code function.

The access code is accepted showing a green check ✓ for a few seconds allowing you to continue.

## Caution…

If you choose to let your access code consist of only 1, 2 or 3 digits you must enter the access code with 0 followed by the chosen value.

Example:

☞ The access code 12 is selected.

☞ Type in 0012 in the Enter Access Code box

## Note…

The access code can be deleted allowing you to change the Min/Max SET temperature without having to enter the access code.

☞ Press ◎ or ↵ to access the Access code function.

☞ Type in your access code.

No new value is entered.

☞ Accept the new setting (empty box).

It is now possible to enter the editor without using the access code.

### 4.11.2 Setting the temperature resolution

☞ Choose between :

- SET
- READ
- TRUE
- SENSOR

☞ Choose between the resolutions:

- 0.001
- 0.01
- 0.1
- 1

**SENSOR visible:**

☞ Choose between :

- Visible
- Hidden

If the Hidden option is chosen the Sensor Under Test reading will not be displayed on the main screen.

### 4.11.3 Setting the sound, volume and operating mode

**Sound:**

☞ Choose between :

- On
- Off

Enables the calibrator to make a sound during operation. Sound responses are given at the following conditions:

- Stability
- Warnings
- Accept of data entry
- Reject of data entry

**Volume:**

☞ The volume of the sound can be adjusted from 0 – 100%.

**Operating mode:**

☞ Choose between :

- Fast
- Silent

"Fast" – the fan operates in a fast mode giving the best performance of cooling.

"Silent" – the fan operates in a silent mode reducing the noise. Using this option the cooling process is made a little slower and the calibrator might not be able to reach the specified minimum temperature.

### 4.11.4 Setting calibration interval

Sets the required recalibration interval for the calibrator.

☞ Choose a value between 1 month and 99 months.

When the recalibration interval is exceeded, the warning symbol will appear in the display.

**Note…**

The recalibration interval is not used for the external reference sensor and the DLC. The interval for these sensors are stored in the intelligent sensor.

### 4.11.5 Changing the date and time

**Date:**

☞ Use the NUMERIC keys to enter a new date.

The date can only be entered using the format yyyy-mm-dd. When entering the date with different format, the text will disappear when you try to accept the setting.

**Time:**

The calibrator is set up with a default time (present time).

☞ Use the NUMERIC keys to enter a new time using the format hh.mm.

**Time Zone:**

☞ The relevant time zone is selected from a list of various zones.

### 4.11.6 Saving a setup

Saving a setup saves parameters in the Setup menu.

☞ Access the Instrument Settings menu by selecting “Load/Save [1]” from the Calibrator Setup menu.

The Instrument Settings are displayed.

☞ Select a register number to be used for saving.

The setup will be saved with the selected register number.

**Note…**

In the Calibrator Setup the following parameters will not be saved:

- Min SET temp
- Max SET temp
- SENSOR visible

You can save up to 10 setups.

When the setup is saved the parameters are visible in the right side of the screen.

### 4.11.7 Loading a setup

Loading a setup causes the setup parameters to be overwritten.

☞ Select a setup from the list to be loaded.

The selected setup will be loaded into the calibrator's memory.

☞ Press ⮌ to return to the Calibrator setup menu.

### 4.11.8 Resetting the instrument setup to factory defaults

Resetting to the factory default settings changes the active setup to the initial settings.

### 4.11.9 Network Configuration (for service use only)

☞ Access the Network Configuration function by selecting “Network [2]” from the Calibration Setup menu.

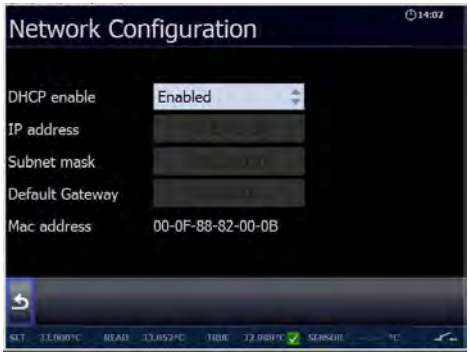


The Network Configuration screen is displayed.

When DHCP is set to Enabled, the IP address will be updated when leaving the network menu.

When DHCP is disabled, you can configure the IP-settings manually using the NUMERIC keys.

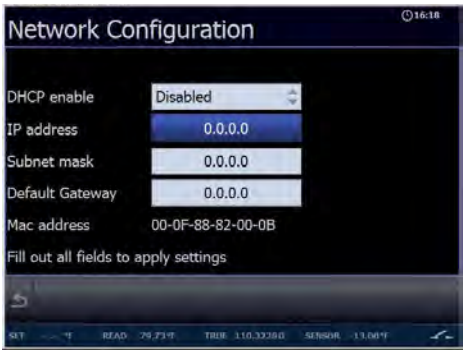

## 4.12 Selecting the stirrer speed (RTC-158/250 A/B/C only)

☞ The Sensor Setup can be entered through the vertical menu (press ☰)
Use the ARROW keys to select “Stirrer Speed”.

☞ Use the NUMERIC keys to enter a value, or ⊙ or ↵ to accept the value. When pressing the ACTION key or the ENTER key the calibrator returns to the main menu screen.

☞ Select a speed setting between 0 and 100.
The normal setting is between 30 and 40.

When using the RTC-158/250 A/B/C with a dry block kit the stirrer speed must be set to 0.

The DLC will be disabled when the stirrer is started

## Caution…

If the speed level chosen is too high, the magnet will fall off making a rattling sound and there will be no stirring in the fluid. With no stirring of the fluid, temperature gradients will emerge in the bath, which will again affect the result of the calibration.

To reconnect the magnet, set the speed level to 0 and select a speed setting lower than the previous.

☞ Press ⊙ or ↵ to accept the value and return to the setup menu.

## 4.13 Information Screen

☞ Information about the status can be viewed using the Info function from the vertical menu (press ☰).

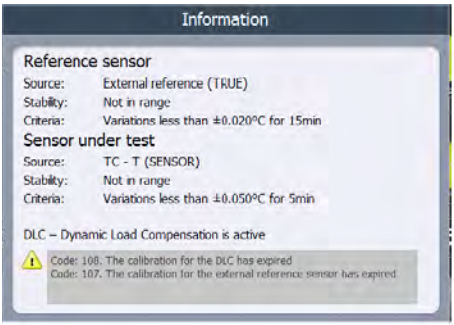


A status summary of the sensors setting and stability information is displayed.

If a warning or an error has occurred, it will be listed on the information screen.

## Note…

The list will be cleared, when the calibrator is switched off.

☞ Press ↩ to exit the Info function.

## 4.14 About the calibrator

☞ Information about the calibrator can be viewed using the About function from the vertical menu (press ☰).

This informs you about the calibrator type, the software version installed, the serial number, the date when it was last calibrated, the build date and the build description.

☞ Press ⮌ to exit the About function.

## 4.15 Simulation or training

☞ Switch off the calibrator and switch it on again using the power control switch.
The start up screen is displayed.

Shortly after a black screen is displayed for a few seconds and then the start up screen is displayed again.

Now press and hold ↩ down for a minimum of 5 seconds while the start screen is displayed.

☞

The calibrator will start in the simulation mode.

This mode is used to train personnel. The simulation differs from the standard setting in the following ways:

- The instrument does not actually heat up or cool down the well.
- The heating and cooling processes are simulated at exaggerated speeds.
- Data are not stored in the calibrator’s memory.

The calibrator will remain in simulation mode until it is switched off.

# 5.0 After use

## 5.1 Storing and transporting the calibrator

### Caution…

The following guidelines should always be observed when storing and transporting the calibrator. This will ensure that the instrument and the sensor remain in good working order (all versions).

### Warning

The calibrator **must** be switched off before any attempt to service the instrument is made. There are no user serviceable parts inside the calibrator.

Switch off the calibrator using the power control switch.
Note that the calibration procedure may be interrupted at any time using the power control switch. Switching off the calibrator during the calibration process will not damage either the instrument or the sensor.

**Dry-block calibrators only**

The following routine must be observed **before the insertion tube is** removed and the instrument switched off:

**Over 50°C/122°F**

If the calibrator has been heated up to temperatures above 50°C/122°F, you must wait until the instrument reaches a temperature **below 50°C/122°F** before you switch it off.

**Below 0°C/32°F**
**(applies only to the RTC-156/157/158/159/187 A/B/C models)**

- **Do not** touch the well or insertion tube when these are below 0°C/32°F - they might create frostbite.
- If the calibrator has reached a temperature below 0°C/32°F, ice crystals may form on the insertion tube and on the well. This, in turn, may cause the material

surfaces to oxidize.
To prevent this from happening, the insertion tube and the well must be dried. This is done by heating up the calibrator to min. 100°C/212°F until all water left has evaporated.
Remove the insulation plug while heating up.

It is very important that humidity in the well and insertion tube is removed to prevent corrosion and frost expansion damages.

Remove the insertion tube from the calibrator using the tool for insertion tube supplied with the instrument (see fig. 14).

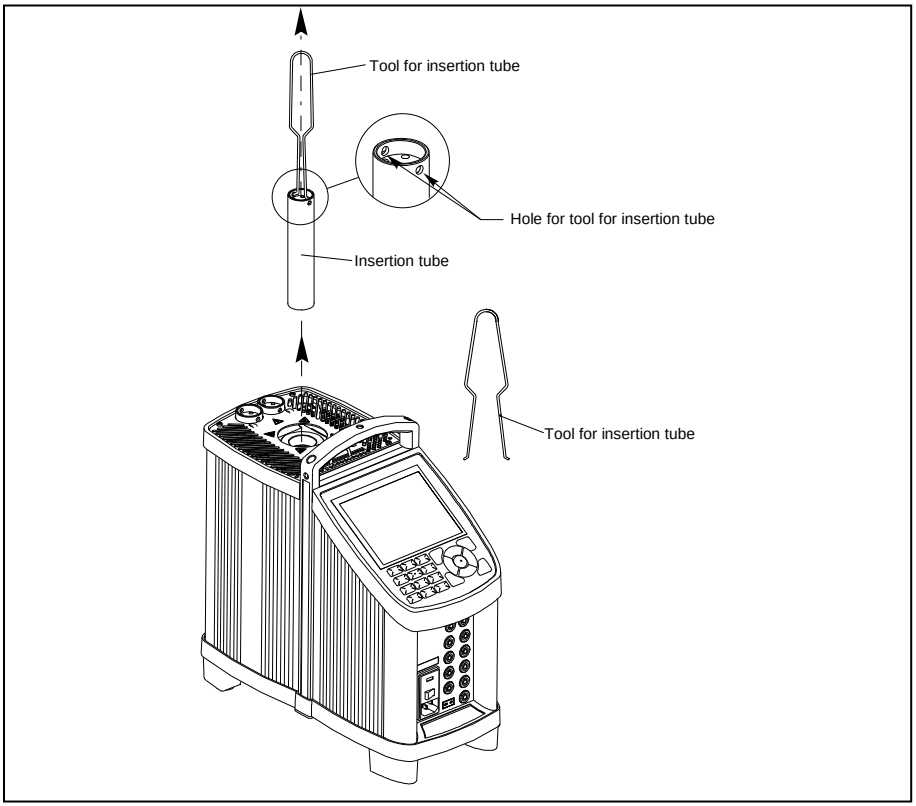


Fig. 14

## Caution – Hot surface

**Do not** remove the insert from the calibrator before the insert has cooled down to less than 50°C/122°F.

## Caution…

The insertion tube must **always** be removed from the calibrator after use.

The humidity in the air may cause corrosion oxidation on the insertion tube inside the instrument. There is a risk that the insertion tube may get stuck if this is allowed to happen.

## Warning (all versions)

- **Never** leave hot insertion tubes that have been removed from the calibrator unsupervised – they may constitute a fire hazard or personal injury.

  If you intend to store the calibrator in the optional aluminium carrying case after use, you **must** ensure that the instrument has cooled to a temperature **below 100°C/212°F** before placing it in the carrying case.
- **Never** place a hot insertion tube in the optional carrying case.
- **Do not** touch the well or insertion tube when these are deep frozen – they might create frostbite.

### 5.1.1 Transporting the dry-block calibrator

## Caution…

The insertion tube **must** be removed to avoid damage to the instrument if the calibrator is to be transported long distances.

### 5.1.2 Transporting the liquid bath calibrator

**Warning**

**Do not** move the liquid bath calibrator containing hot fluid. When spilled the fluid might cause serious wounds. Before transporting the fluid it must be cooled down to a temperature near ambient.

When the fluid has cooled down it is possible to move the liquid bath calibrator by hand. The special designed lid must be used to reduce the risk of spilling. Please notice that the lid is not completely fluid tight.

For any longer form of transportation the fluid **must** be removed. (see section 5.2).

## 5.2 Emptying the well (liquid baths only)

It is not recommendable to leave the fluid in the well for long-term storage. The best way to store the fluid is in its original airtight container.

**Caution – Hot surface**

- **Do not** handle hot fluid.
- **Do not** attempt to remove hot fluid with the liquid drainage tube, as it might melt.
- **Do not** leave any fluid (silicone oil) in the spill tray.
- **Do not** touch the items removed from the well – they may be very hot and cause burns.
- **Never** leave hot items, which have been removed from the well, unsupervised – they may constitute a fire hazard or personal injury.

The following guidelines must be observed before emptying the well :

1. Switch off the calibrator using the power control switch.
2. Before handling the fluid, it must be cooled down to a temperature close to ambient.
3. Remove the sensor basket and clean it with disposable paper towels.
4. Remove the stirring magnet using the stirring magnet remover supplied and clean it with disposable paper towels.
5. Empty the well using the liquid drainage tube supplied. Tilting the calibrator is not recommendable, as it increases the risk of splashing oil all over the test area.

**Caution…**

Avoid getting silicone oil on the clothes. It is impossible to wash off.

6. Any remaining oil in the well is cleaned up using disposable paper towels. It is recommendable to use the optional cleaning oil when cleaning the well

# 6.0 Replacing the main fuses

## Warning

- The calibrator **must** be switched off before any attempt to service the instrument is made. There are no user serviceable parts inside the calibrator.
- The fuse box **must not** be removed from the power control switch until the mains cable has been disconnected.
- The two main fuses must have the specified current and voltage rating and be of the specified type. The use of makeshift fuses and the short-circuiting of fuse holders are prohibited and may cause a hazard.

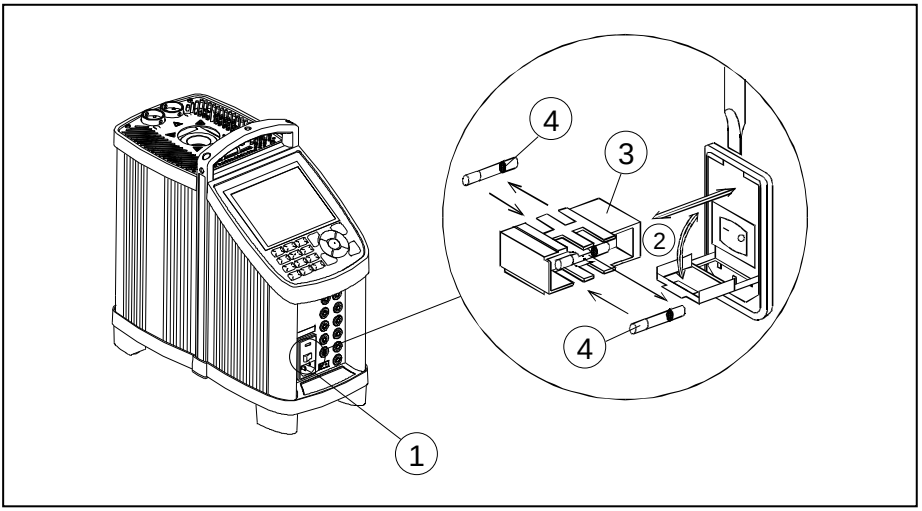


Fig. 15

① Locate the main fuses in the fuse box in the power control switch.

② Open the lid of the fuse box using a screwdriver.

③ Remove the fuse box.

④ Replace the fuses.

- RTC-156/157/158/159/187: 115V 8AT = 127211 / 230V, 4AT = 127210
- RTC-250/700: 115V, 10AF = 60B302 / 230V, 5AF = 127573

If the fuses blow immediately after you have replaced them, the calibrator should be returned to the manufacturer for service.

## 6.1 Error messages

Error messages are displayed in a dialog box with the following text:

**Internal Error # xxx**
**Please read the manual for further information**

| Error # | Error text | Category | Solution |
|---|---|---|---|
| 0 | **Read temperature lower than calibrator minimum temperature.** | Warning | Please report the error to your local distributor or to AMETEK Denmark's service department. |
| 1 | **Read temperature higher than calibrator maximum temperature.** | Warning | Please report the error to your local distributor or to AMETEK Denmark's service department. |
| 2 | **Read temperature higher than current SET-temperature.** | Warning | Please report the error to your local distributor or to AMETEK Denmark's service department. |
| 3 | **Top Zone temperature deviation.** | Warning | The calibrator could be stressed due to the insertion of too many sensors. Remove some of the sensors. If the error still occurs please report the error to your local distributor or to AMETEK Denmark's service department. |
| 4 | **Internal reference measuring circuit error.** | Warning | Please report the error to your local distributor or to AMETEK Denmark's service department. |
| 5 | **Internal reference sensor error.** | Warning | Please report the error to your local distributor or to AMETEK Denmark's service department. |

| Error # | Error text | Category | Solution |
|---|---|---|---|
| 6 | **Zone 2 sensor error.** | Warning | Please report the error to your local distributor or to AMETEK Denmark's service department. |
| 7 | **Zone 1 sensor error.** | Warning | Please report the error to your local distributor or to AMETEK Denmark's service department. |
| 8 | **Heater 1 error.** | Warning | Please report the error to your local distributor or to AMETEK Denmark's service department. |
| 9 | **Heater 2 error.** | Warning | Please report the error to your local distributor or to AMETEK Denmark's service department. |
| 10 | **Heater 3 error.** | Warning | Please report the error to your local distributor or to AMETEK Denmark's service department. |
| 11 | **Heater 4 error.** | Warning | Please report the error to your local distributor or to AMETEK Denmark's service department. |
| 12 | **Heater control error** | Error | Please report the error to your local distributor or to AMETEK Denmark's service department. |
| 13 | **Temperature protection** | Error | Please report the error to your local distributor or to AMETEK Denmark's service department. |
| 14 | **Temperature protection Stirling unit** | Error | Please report the error to your local distributor or to AMETEK Denmark's service department. |
| 15 | **Stirling unit error** | Error | Please report the error to your local distributor or to AMETEK Denmark's service department. |
| 16 | **Stirling unit Temperature too high** | Error | Please report the error to your local distributor or to AMETEK Denmark's service department. |
| 17 | **Top zone read temperature lower than calibrator minimum temperature.** | Error | Please report the error to your local distributor or to AMETEK Denmark's service department. |
| 18 | **Top zone read temperature higher than calibrator maximum** | Error | Please report the error to your local distributor or to AMETEK Denmark's service department. |

| | | | |
|---|---|---|---|
| | **temperature.** | | |
| **Error #** | **Error text** | **Category** | **Solution** |
| 19 | **Bottom zone read temperature lower than calibrator minimum temperature.** | Error | Please report the error to your local distributor or to AMETEK Denmark's service department. |
| 20 | **Bottom zone read temperature higher than calibrator maximum temperature.** | Error | Please report the error to your local distributor or to AMETEK Denmark's service department. |
| 21 | **Bottom zone temperature deviation.** | | The calibrator could be stressed due to the insertion of too many sensors. Remove some of the sensors. If the error still occurs please report the error to your local distributor or to AMETEK Denmark's service department. |
| 22 | **Ambient temperature sensor error.** | Error | Please report the error to your local distributor or to AMETEK Denmark's service department. |
| 100 | **Sensor input board error.** | Error | Please report the error to your local distributor or to AMETEK Denmark's service department. |
| 101 | **The sensor input board has not been calibrated.** | Error | The sensor inputs (mA/Ω/mV/V) needs to be calibrated.<br>Please report the error to your local distributor or to AMETEK Denmark's service department |
| 102 | **Reference input board error.** | Error | Please report the error to your local distributor or to AMETEK Denmark's service department. |
| 103 | **The reference input board has not been calibrated** | Error | The reference input needs to be calibrated.<br>Please report the error to your local distributor or to AMETEK Denmark's service department |
| 104 | **The calibration for the heat source has expired.** | Warning | Calibrate the heat source |
| 105 | **The calibration for the sensor input board has expired.** | Warning | Calibrate the sensor input (mA/Ω/mV/V) |

| Error # | Error text | Category | Solution |
|---|---|---|---|
| 106 | **The calibration for the reference input board has expired.** | Warning | Calibrate the reference input |
| 107 | **The calibration for the external reference sensor has expired.** | Warning | Calibrate the external reference sensor |
| 108 | **The calibration for the DLC has expired.** | Warning | The instrument needs to be calibrated |
| 109 | **Heat source not calibrated** | Error | The instrument needs to be recalibrated. |

## 6.2 Returning the calibrator for service

When returning the calibrator to the manufacturer for service, please enclose a fully completed service information form. Simply copy the form on the following page and fill in the required information.
The calibrator should be returned in the original packing.

The RTC-159 contains the flammable refrigerating gas R-1270 and the gas R-704. The amount of gas is less than 100g and it is considered not subject to the Dangerous Goods Regulations. However, this must be declared when shipping.

When dispatching the RTC-159 please mark the package and the shipping papers with this text:

*** NOT RESTRICTED , SPECIAL PROVISION A103 ***

## Note…

If the software detects an error during operation, the error will be shown in the display.

Make a note of the error message and contact your distributor or AMETEK Denmark's service department.

AMETEK Denmark's liability ceases if:

- parts are replaced/repaired using spare parts which are not identical to those recommended by the manufacturer.
- non-original parts are used in any way when operating the instrument.

AMETEK Denmark's liability is restricted to errors that originated from the factory.

# Service info

**Customer data:** **Date:**

Customer name and address:_____

Attention and Dept.:_____

Fax no./Phone no.:_____

Your order no.:_____

Delivery address:_____

Distributor name:_____

---

**Instrument data:**

Model and Serial no.:_____

Warranty claimed Yes:____ No:_____ Original invoice no.:_____

| Temp. calibration | Sensor input | **Service request:** | **This instrument is sent for (please check off):** |
|---|---|---|---|
| ☐ | ☐ | ___ Calibration as left | ___ Check |
| ☐ | ☐ | ___ Calibration as found and as left | ___ Service |
| ☐ | ☐ | ___ Accredited calibration as left | ___ Repair |
| ☐ | ☐ | ___ Accredited calibration as found and as left. | |

**Diagnosis data/cause for return:**

Diagnosis/Fault description:_____

_____

Special requests:_____

_____

Safety precautions: if the product has been exposed to any hazardous substances, it must be thoroughly decontaminated before it is returned to AMETEK. Details of the hazardous substances and any precautions to be taken must be enclosed.

# 7.0 Maintenance

## 7.1 Cleaning

### Caution…

- Before cleaning the calibrator, you **must** switch it off, allow it to cool down and remove all cables.
- The insertion tube must **always** be removed from the calibrator after use.

  The humidity in the air may cause corrosion oxidation on the insertion tube inside the instrument. There is a risk that the insertion tube may get stuck if this is allowed to happen.

### Caution – Hot surface

**Do not** remove the insert from the calibrator before the insert has cooled down to less than 50°C/122°F

### Warning (all versions)

- **Never** leave hot insertion tubes that have been removed from the calibrator unsupervised – they may constitute a fire hazard or personal injury.

  If you intend to store the calibrator in the optional aluminium carrying case after use, you **must** ensure that the instrument has cooled to a temperature **below 100°C/212°F** before placing it in the carrying case.

- **Do not** touch the well or insertion tube when these are deep frozen – they might create frostbite.

Users should/must carry out the following cleaning procedures as and when required:

- **The exterior of the instrument –** Clean using water or isopropyl alcohol and a soft cloth.
  The cloth should be wrung out hard to avoid any water penetrating the calibrator and causing damage.
  The keyboard may be cleaned using isopropyl alcohol when heavily soiled.

- If hazardous material is spilled onto or into the calibrator, the user is responsible for appropriate decontamination.

- Before using any decontamination or cleaning agents other than those specified in this manual, the user should check with AMETEK to ensure compatibility with the calibrator. Use of decontamination or cleaning agents incompatible with the calibrator may damage the calibrator or cause hazard.

- **The insertion tube –** must **always** be clean and should be regularly wiped using a soft, lint-free, dry cloth.
  You must ensure there are no textile fibres on the insertion tube when it is inserted in the well. The fibres may adhere to the well and damage it.
  If the calibrator has reached a temperature below 0°C/32°F, ice crystals may form on the insertion tube. This, in turn, may cause the material surfaces to oxidize.
  To prevent this from happening, the insertion tube must be dried. This is done by heating up the calibrator to min. 100°C/212°F until all water left has evaporated.
  Remove the insulation plug while heating up.

  It is very important that humidity in the insertion tube is removed to prevent corrosion and frost expansion damages.

- **The well –** must **always** be clean.
  Dust and textile fibres in the well should be removed from the dry-block calibrator using e.g. compressed air.
  Remains of silicone oil in the well should be removed from the liquid bath calibrator by using special cleaning oil.

## Warning

**REMEMBER** to wear goggles when using compressed air and cleaning oil.

If the calibrator has reached a temperature below 0°C/32°F, ice crystals may form on the well. This, in turn, may cause the material surfaces to oxidize.
To prevent this from happening, the well must be dried. This is done by heating up the calibrator to min. 100°C/212°F until all water left has evaporated.

Remove the insulation plug while heating up.

It is very important that humidity in the well is removed to prevent corrosion and frost expansion damages.

- **The stirring magnet and sensor basket (RTC-158/250 A/B/C only) –** When removed from the calibrator the items must be cleaned thoroughly with dry disposable paper towels to avoid spilling of fluid. Drops of silicone oil can be removed by using special cleaning oil.

- **The sensor-under-test (RTC-158/250 A/B/C only) –** When removed from the calibrator the sensor must be cleaned thoroughly with dry disposable paper towels to avoid spilling of fluid. Drops of silicone oil can be removed by using special cleaning oil.

**Caution…**

Avoid getting silicone oil on the clothes. It is impossible to wash off.

## 7.2 Adjusting and calibrating the instrument

You are advised to return the calibrator to AMETEK Denmark A/S or another accredited laboratory at least once a year for calibration.

Alternatively, you can calibrate/adjust the calibrator yourself using the

AmeTrim Adjust and Calibration Software.

Please refer to the Ametrim User Manual also found on the installation USB memory stick.

## 7.3 Maintenance of STS-reference sensor

Use the configuration software CON050 supplied with the RTC to update calibration information in the intelligent reference sensor.

Read the STS- and CON050 manuals for instruction about calibration and up-/download procedure.

The following information in the sensor is used by the RTC and must be filled in correctly:

- Serial number
- Model number
- Sensor type
- Temperature range Min/Max
- Electrical output Min/Max
- RTD type (CvD or ITS-90)
- Calibration date
- Calibration initials
- Calibration period
- R0, A, B and C (RTD type = CvD)
- RTPW, A(LR), B(LR)C(LR)/C1(LR), C2(LR), C3(LR), C4(LR), C5(LR) A(HR), B(HR), C(HR), D(HR) and W(HR) (RTD type = ITS-90)

All other data are not used by the RTC.

On the sensor calibration certificates, the coefficients can be listed using the ITS-90 names for coefficients. The table below can be used to convert the ITS-90 coefficient names to RTC-coefficient names for the ITS-90 subranges used in the RTC-calibrator temperature range.

| | ITS90 Subrange | | | | | | | | | | |
|---|---|---|---|---|---|---|---|---|---|---|---|
| RTC coefficient | 3 | 4 | 5 | 6 | 7 | 8 | 9 | 10 | 11 | | |
| A(LR) | a3 | a4 | 0 | | | | | | | | |
| B(LR) | b3 | b4 | 0 | | | | | | | | |
| C(LR)/C1(LR) | c3 | 0 | 0 | | | | | | | | |
| A(HR) | | | a5 | a6 | a7 | a8 | a9 | a10 | a11 | | |
| B(HR) | | | b5 | b6 | b7 | b8 | b9 | 0 | 0 | | |
| C(HR) | | | 0 | c6 | c7 | 0 | 0 | 0 | 0 | | |
| D(HR) | | | 0 | d | 0 | 0 | 0 | 0 | 0 | | |
| W | | | | w | | | | | | | |

## 7.4 Maintenance of DLC-sensor

Use the configuration software CON050 supplied with the RTC to update calibration information in the intelligent reference sensor.

Read the DLC- and CON050 manuals for instruction about calibration and up-/download procedure.

The following information in the sensor is used by the RTC and must be filled in correctly:

- Serial number
- Model number
- Sensor type
- Temperature range Min/Max
- Electrical output Min/Max
- TC-type (DLC-155/158/159/250 = T, DLC-700 = N)
- CJC (Must be set to "No compensation")
- Calibration date
- Calibration initials
- Calibration period
- Correction coefficients A, B and C

All other data are not used by the RTC.

## 7.5 Testing the overtemperature function

It is recommended to test the overtemperature function every 12 months. The test is carried out as follows:

1. In the “Calibrator Setup” menu, set the “Max. SET temperature” to the maximum temperature of the calibrator.

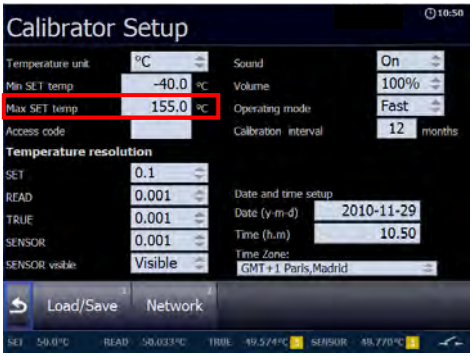


2. Press “Menu” ☰ and set the SET temperature to the maximum value.
3. Let the calibrator heat to and stabilize at the maximum temperature.
4. Set the “Max. SET temperature” of the calibrator to 50°C below the maximum temperature of the calibrator.

   If the Read temperature now starts decreasing, the overtemperature function is working properly.
5. Set the “Max. SET temperature” back to the maximum temperature of the calibrator and turn off/on the calibrator.
6. When powered up again, the calibrator will operate normally.

# 8.0 Technical specifications

The illustration below shows the setup that forms the basis for the technical specifications for dry-block calibrators.

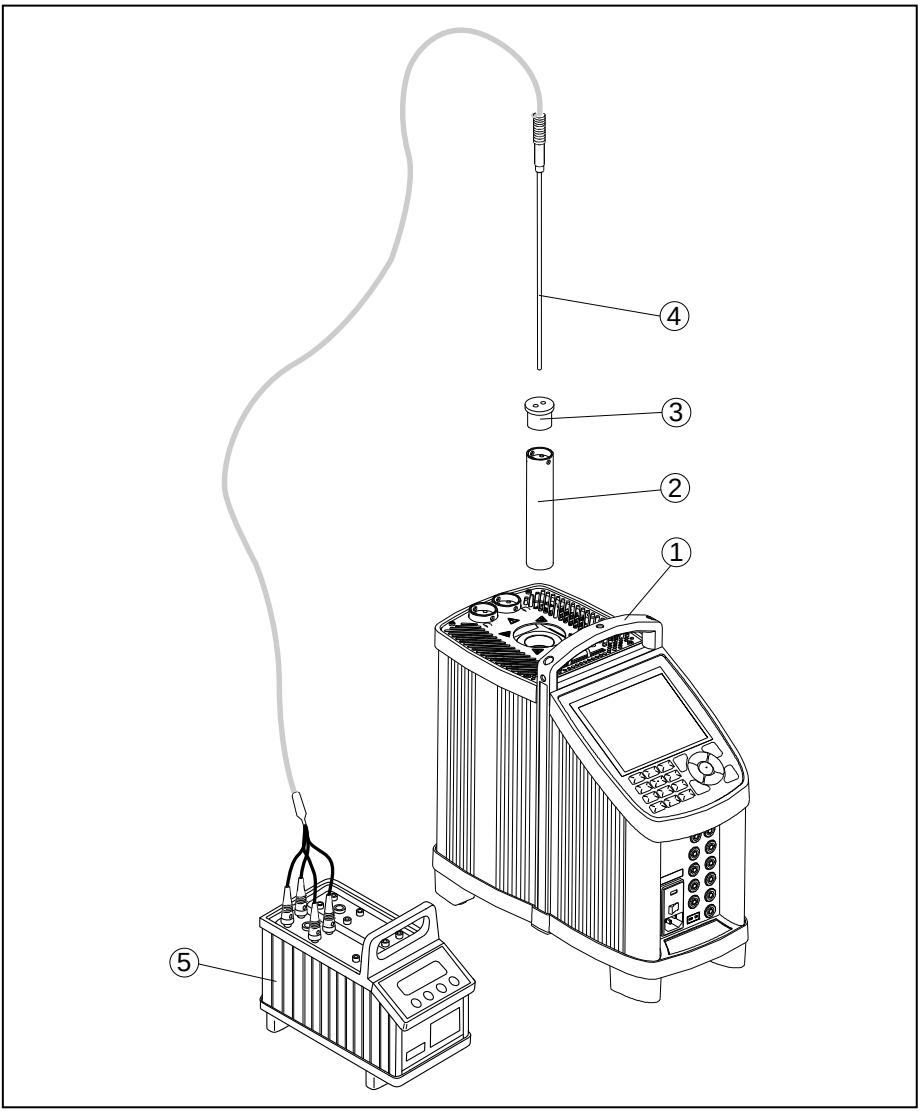


Fig. 18

| Pos. | Description – dry-block calibrators (fig. 18) |
|---|---|
| ① | Calibrator |
| ② | Ø1/4“ insertion tube |
| ③ | Insulation plug (RTC-156/157/158/187/250 only) |
| ④ | 1/4” STS-200 sensor |
| ⑤ | DTI-1000 reference precision thermometer |

The illustration below shows the setup that forms the basis for the technical specifications for liquid bath calibrators.

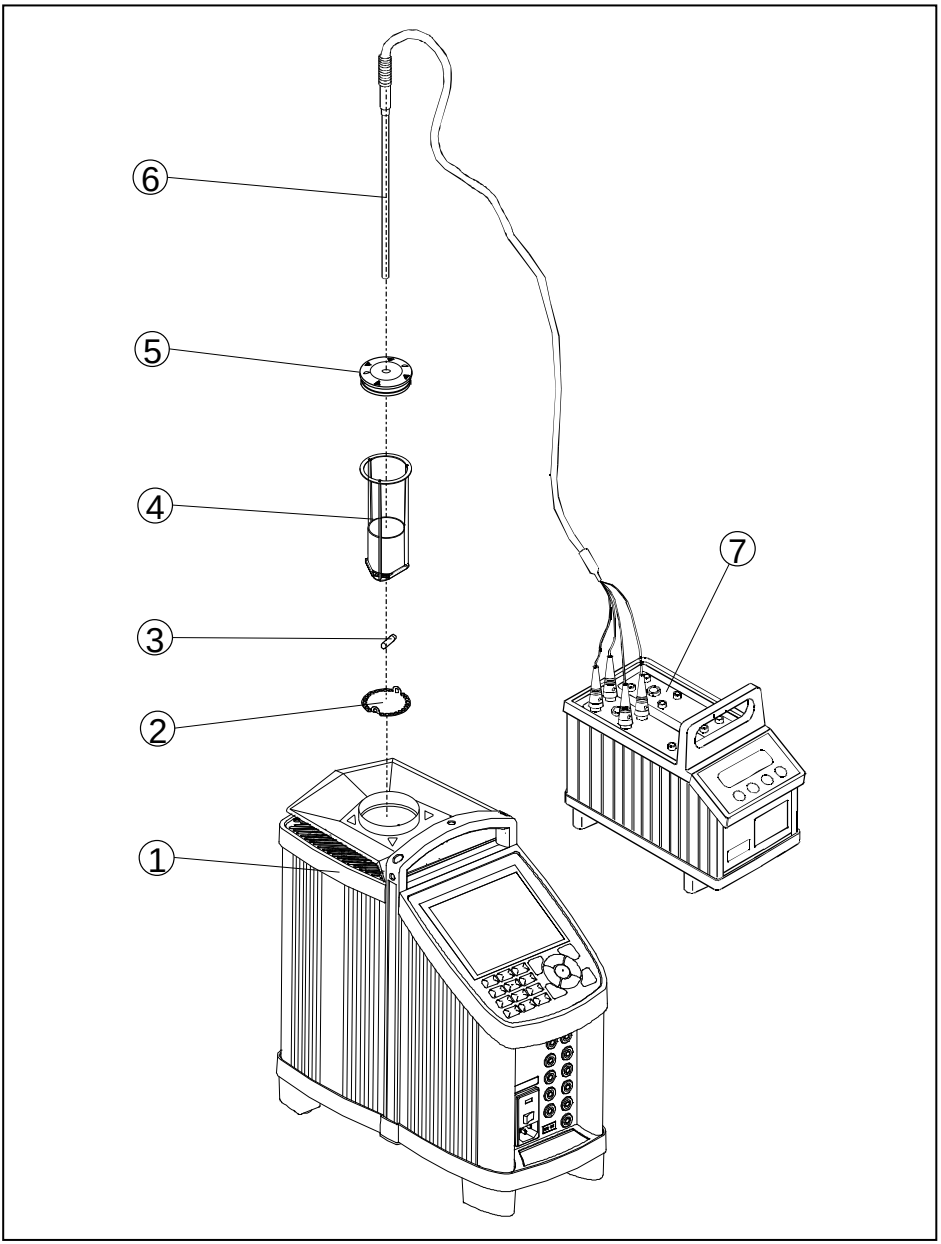


Fig. 19

| Pos. | Description – liquid bath calibrators (fig. 19) |
|---|---|
| ① | Calibrator |
| ② | Bottom shield |
| ③ | Stirring magnet |
| ④ | Sensor basket |
| ⑤ | Lid for calibration |
| ⑥ | 1/4” STS-200 sensor |
| ⑦ | DTI-1000 reference precision thermometer |

The illustration below shows the setup that forms the basis for the technical specifications for cooling calibrators.

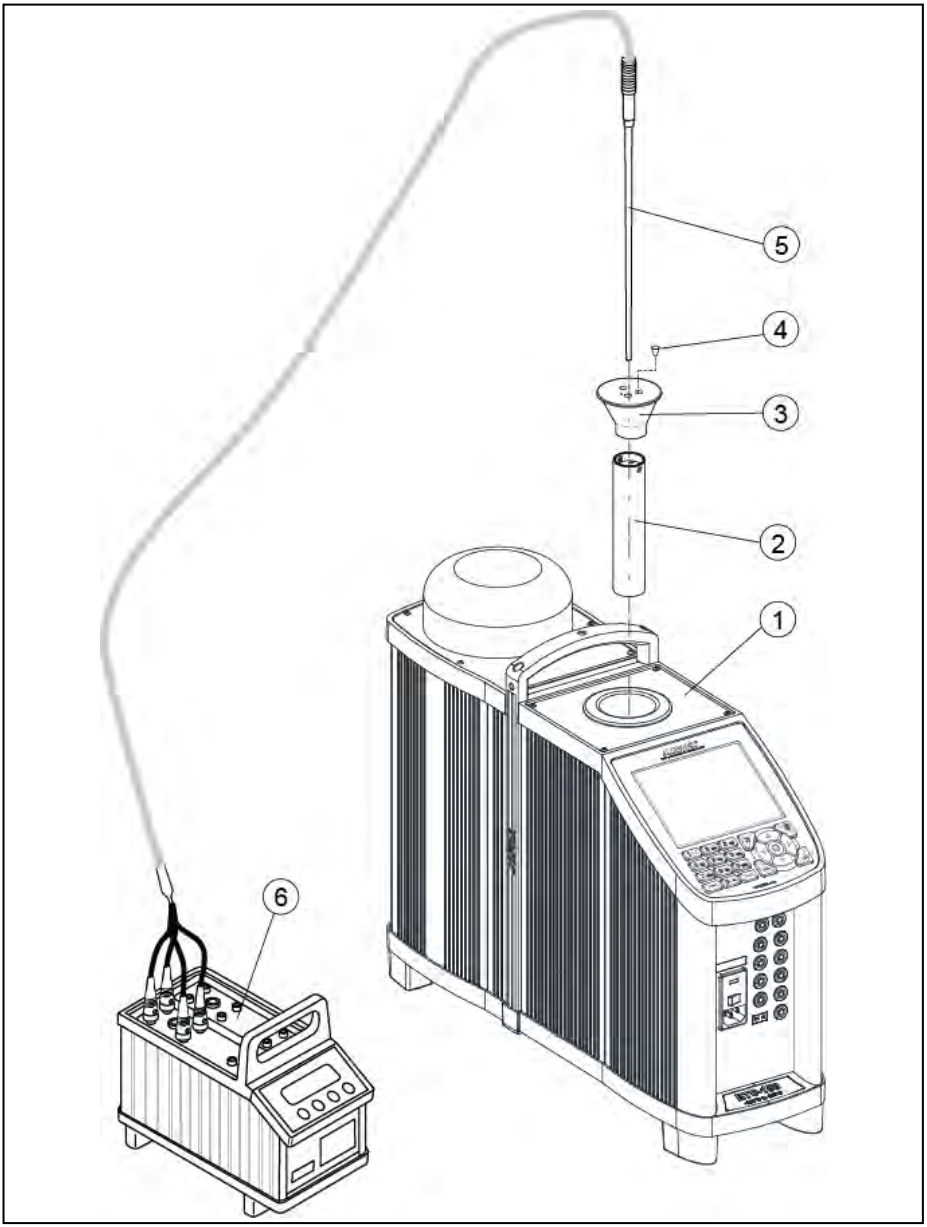


Fig. 20

| Pos. | Description – cooling calibrators (fig. 20) |
|---|---|
| ① | Calibrator |
| ② | Ø1/4” insertion tube |
| ③ | Insulation plug (RTC-159 only) |
| ④ | Silicone plug for insulation plug |
| ⑤ | 1/4” Pt 100 sensor with traceable certificate |
| ⑥ | DTI-1000 reference precision thermometer with traceable certificate |

# TECHNICAL SPECIFICATIONS

*All specifications are given with an ambient temperature of 23°C/73.4°F ± 3°C/5.4°F*

| MECHANICAL SPECIFICATIONS | RTC-156 A/B/C |
|---|---|
| Dimensions l × w × h | 362 × 171 × 363 mm / 14.2 x 6.7 x 14.3 inch |
| Weight | RTC-156 A : 10.4 kg / 23.0 lb<br>RTC-156 B/C : 10.5 kg / 23.1 lb |
| Shipping dimensions | 580 x 250 x 500mm / 22.8 x 9.8 x 19.7 inch (Cardboard box)<br>550 x 440 x 610mm / 21.7 x 17.3 x 24.0 inch (Carrying case in cardboard box) |
| Shipping weight | 14.8 kg / 32.6 lb (in cardboard box)<br>20.5 kg / 45.2 lb (in carrying case in cardboard box) |
| Bore diameter/depth of well | ø30 mm / 150 mm – ø1.18 inch / 5.91 inch |
| Weight non-drilled insert | 290 g / 10.2 oz |
| **POWER SUPPLY** | |
| Line voltage/frequency | 90-127VAC / 180-254VAC 47-63 Hz |
| Power consumption | 400 W |
| Type of connection | IEC320 |
| **COMMUNICATION INTERFACES** | |
| Type of connections | USB A, USB B, SD card slot, RJ45 |
| **OTHER CONNECTIONS** | |
| Syncronisation relay output | 3,5 mm mini jack. |

| MECHANICAL SPECIFICATIONS | RTC-156 A/B/C |
|---|---|
| **ENVIRONMENT** | |
| Ambient operating temperature range | 0-40°C / 32-104°F |
| Storage temperature range | -20-50°C / -4-122°F |
| Humidity range | 0-90% RH. |
| Protection class | IP10 |
| Electromagnetic environment | Designed for use in basic electromagnetic environment as defined in EN61326-1 : 2013. Length of test cables should not exceed 3 m. |
| **READOUT SPECIFICATIONS** | |
| Resolution | 0.001°C / 0.001°F / 0.001 K |
| Temperature units | °C / °F / K |

| THERMAL SPECIFICATIONS | RTC-156 A/B/C |
|---|---|
| Maximum temperature | 155°C / 311°F |
| Minimum temperature * | -46°C / -50.8°F @ ambient temperature 0°C / 32°F<br>-30°C / -22.0°F @ ambient temperature 23°C / 73.4°F<br>-15°C / 5.0°F @ ambient temperature 40°C / 104°F |

| THERMAL SPECIFICATIONS | RTC-156 A/B/C |
|---|---|
| Well specifications | <u>Loaded with 2 x 3mm sensors:</u><br><br>40 mm / 1.57 inch axial homogeneity:<br>±0.025°C/0.045°F @ -30°C/-22°F to 0°C/32°F<br><br>40 mm / 1.57 inch axial homogeneity:<br>±0.020°C/0.036°F @ 0°C/32°F to 50°C/122°F<br><br>40 mm / 1.57 inch axial homogeneity:<br>±0.025°C/0.045°F @ 50°C/122°F to 155°C/311°F<br><br>50 mm / 1.97 inch axial homogeneity:<br>±0.025°C/0.045°F @ -30°C/-22°F to 0°C/32°F<br><br>50 mm / 1.97 inch axial homogeneity:<br>±0.020°C/0.036°F @ 0°C/32°F to 50°C/122°F<br><br>50 mm / 1.97 inch axial homogeneity:<br>±0.025°C/0.045°F @ 50°C/122°F to 155°C/311°F<br><br>60 mm / 2.36 inch axial homogeneity:<br>±0.025°C/0.045°F @ -30°C/-22°F to 0°C/32°F<br><br>60 mm / 2.36 inch axial homogeneity:<br>±0.020°C/0.036°F @ 0°C/32°F to 50°C/122°F<br><br>60 mm / 2.36 inch axial homogeneity:<br>±0.025°C/0.045°F @ 50°C/122°F to 155°C/311°F<br><br>70 mm / 2.76 inch axial homogeneity:<br>±0.035°C/0.063°F @ -30°C/-22°F to 0°C/32°F<br><br>70 mm / 2.76 inch axial homogeneity:<br>±0.030°C/0.054°F @ 0°C/32°F to 50°C/122°F<br><br>70 mm / 2.76 inch axial homogeneity:<br>±0.035°C/0.063°F @ 50°C/122°F to 155°C/311°F<br><br>80 mm / 3.15 inch axial homogeneity:<br>±0.050°C/0.09°F @ -30°C/-22°F to 0°C/32°F<br><br>80 mm / 3.15 inch axial homogeneity:<br>±0.040°C/0.072°F @ 0°C/32°F to 50°C/122°F<br><br>80 mm / 3.15 inch axial homogeneity:<br>±0.050°C/0.09°F @ 50°C/122°F to 155°C/311°F<br><br><u>Loaded with 3 x 3mm sensors + 1 x 4mm sensors:</u><br><br>40 mm / 1.57 inch axial homogeneity:<br>±0.025°C/0.045°F @ -30°C/-22°F to 0°C/32°F<br><br>40 mm / 1.57 inch axial homogeneity:<br>±0.020°C/0.036°F @ 0°C/32°F to 50°C/122°F<br><br>40 mm / 1.57 inch axial homogeneity:<br>±0.025°C/0.045°F @ 50°C/122°F to 155°C/311°F |

50 mm / 1.97 inch axial homogeneity:
±0.025°C/0.045°F @ -30°C/-22°F to 0°C/32°F

50 mm / 1.97 inch axial homogeneity:
±0.020°C/0.036°F @ 0°C/32°F to 50°C/122°F

50 mm / 1.97 inch axial homogeneity:
±0.025°C/0.045°F @ 50°C/122°F to 155°C/311°F

60 mm / 2.36 inch axial homogeneity:
±0.030°C/0.054°F @ -30°C/-22°F to 0°C/32°F

60 mm / 2.36 inch axial homogeneity:
±0.020°C/0.036°F @ 0°C/32°F to 50°C/122°F

60 mm / 2.36 inch axial homogeneity:
±0.035°C/0.063°F @ 50°C/122°F to 155°C/311°F

70 mm / 2.76 inch axial homogeneity:
±0.040°C/0.072°F @ -30°C/-22°F to 0°C/32°F

70 mm / 2.76 inch axial homogeneity:
±0.030°C/0.054°F @ 0°C/32°F to 50°C/122°F

70 mm / 2.76 inch axial homogeneity:
±0.050°C/0.09°F @ 50°C/122°F to 155°C/311°F

80 mm / 3.15 inch axial homogeneity:
±0.060°C/0.11°F @ -30°C/-22°F to 0°C/32°F

80 mm / 3.15 inch axial homogeneity:
±0.040°C/0.072°F @ 0°C/32°F to 50°C/122°F

80 mm / 3.15 inch axial homogeneity:
±0.070°C/0.13°F @ 50°C/122°F to 155°C/311°F

Loaded with 3 x 3mm sensors + 1 x 4mm sensor and 1 x 6 mm sensor

DLC active:

40 mm / 1.57 inch axial homogeneity:
±0.035°C/0.063°F @ -30°C/-22°F to 0°C/32°F

40 mm / 1.57 inch axial homogeneity:
±0.025°C/0.045°F @ 0°C/32°F to 50°C/122°F

40 mm / 1.57 inch axial homogeneity:
±0.035°C/0.063°F @ 50°C/122°F to 155°C/311°F

50 mm / 1.97 inch axial homogeneity:
±0.035°C/0.063°F @ -30°C/-22°F to 0°C/32°F

50 mm / 1.97 inch axial homogeneity:
±0.025°C/0.045°F @ 0°C/32°F to 50°C/122°F

50 mm / 1.97 inch axial homogeneity:
±0.035°C/0.063°F @ 50°C/122°F to 155°C/311°F

| THERMAL SPECIFICATIONS | RTC-156 A/B/C |
|---|---|
| | 60 mm / 2.36 inch axial homogeneity:<br>±0.035°C/0.063°F @ -30°C/-22°F to 0°C/32°F |
| | 60 mm / 2.36 inch axial homogeneity:<br>±0.030°C/0.054°F @ 0°C/32°F to 50°C/122°F |
| | 60 mm / 2.36 inch axial homogeneity:<br>±0.035°C/0.063°F @ 50°C/122°F to 155°C/311°F |
| | 70 mm / 2.76 inch axial homogeneity:<br>±0.045°C/0.081°F @ -30°C/-22°F to 0°C/32°F |
| | 70 mm / 2.76 inch axial homogeneity:<br>±0.040°C/0.072°F @ 0°C/32°F to 50°C/122°F |
| | 70 mm / 2.76 inch axial homogeneity:<br>±0.045°C/0.081°F @ 50°C/122°F to 155°C/311°F |
| | 80 mm / 3.15 inch axial homogeneity:<br>±0.060°C/0.11°F @ -30°C/-22°F to 0°C/32°F |
| | 80 mm / 3.15 inch axial homogeneity:<br>±0.050°C/0.09°F @ 0°C/32°F to 50°C/122°F |
| | 80 mm / 3.15 inch axial homogeneity:<br>±0.060°C/0.11°F @ 50°C/122°F to 155°C/311°F |
| | Difference between borings :<br>0.01°C/0.02°F |
| | Influence from load :<br>0.10°C/0.18°F |
| | Influence from load with Ext. Reference :<br>0.01°C/0.02°F |
| | Long term drift (1 year) :<br>±0.04°C/±0.07°F |
| Temperature coefficient | ±0.005°C/°C (0-20°C and 26-40°C) / ±0.009°F/°F (32-68°F and 79-104°F) |
| Stability | ±0.005°C/ ±0.009°F |
| Accuracy | ±0.10°C/±0.18°F |
| Heating time incl. insert | -30°C / -22.0°F to 23°C / 73.4°F : 4 min. |
| | 23°C / 73.4°F to 155°C / 311°F : 15 min. |
| | -30°C / -22.0°F to 155°C / 311°F : 19 min. |
| Time to stability | 10 min. |
| Cooling time incl. insert | 155°C / 311°F to 100°C / 212°F: 4 min. |
| | 100°C / 212°F to 23°C / 73.4°F: 8 min. |

| THERMAL SPECIFICATIONS | RTC-156 A/B/C |
|---|---|
| | 23°C / 73.4°F to –24°C / -11.2°F : 15 min. |
| | -24°C / -11.2°F to –30°C / -22.0°F: 10 min. |
| | 155°C / 311°F to –30°C / -22.0°F : 37 min. |

| MECHANICAL SPECIFICATIONS | RTC-157 A/B/C |
|---|---|
| Dimensions l × w × h | 362 × 171 × 363 mm / 14.2 x 6.7 x 14.3 inch |
| Weight | RTC-157 A : 10.4 kg / 23.0 lb<br>RTC-157 B/C : 10.5 kg / 23.1 lb |
| Shipping dimensions | 580 x 250 x 500mm / 22.8 x 9.8 x 19.7 inch (Cardboard box)<br>550 x 440 x 610mm / 21.7 x 17.3 x 24.0 inch (Carrying case in cardboard box) |
| Shipping weight | 14.8 kg / 32.6 lb (in cardboard box)<br>20.5 kg / 45.2 lb (in carrying case in cardboard box) |
| Bore diameter/depth of well | ø30 mm / 150 mm – ø1.18 inch / 5.91 inch |
| Weight non-drilled insert | 290 g / 10.2 oz |
| **POWER SUPPLY** | |
| Line voltage/frequency | 90-127VAC / 180-254VAC 47-63 Hz |
| Power consumption | 400 W |
| Type of connection | IEC320 |
| **COMMUNICATION INTERFACES** | |
| Type of connections | USB A, USB B, SD card slot, RJ45 |
| **OTHER CONNECTIONS** | |
| Syncronisation relay output | 3,5 mm mini jack. |
| **ENVIRONMENT** | |
| Ambient operating temperature range | 0-40°C / 32-104°F |
| Storage temperature range | -20-50°C / -4-122°F |
| Humidity range | 0-90% RH. |
| Protection class | IP10 |
| Electromagnetic environment | Designed for use in basic electromagnetic environment as defined in EN61326-1 : 2013. Length of test cables should not exceed 3 m. |

| MECHANICAL SPECIFICATIONS | RTC-157 A/B/C |
|---|---|
| **READOUT SPECIFICATIONS** | |
| Resolution | 0.001°C / 0.001°F / 0.001 K |
| Temperature units | °C / °F / K |

| THERMAL SPECIFICATIONS | RTC-157 A/B/C |
|---|---|
| Maximum temperature | 155°C / 311°F |
| Minimum temperature * | -57°C / -70.6°F @ ambient temperature 0°C / 32°F<br>-45°C / -49°F @ ambient temperature 23°C / 73.4°F<br>-31°C / -23.8°F@ ambient temperature 40°C / 104°F |

*The minimum temperature will be affected by the number of sensors and the dimensions of the sensors being calibrated.

| THERMAL SPECIFICATIONS | RTC-157 A/B/C |
|---|---|
| Well specifications | <u>Loaded with 2 x 3mm sensors:</u><br><br>40 mm / 1.57 inch axial homogeneity:<br>±0.030°C/0.054°F @ -45°C/-49°F to 0°C/32°F<br><br>40 mm / 1.57 inch axial homogeneity:<br>±0.020°C/0.036°F @ 0°C/32°F to 50°C/122°F<br><br>40 mm / 1.57 inch axial homogeneity:<br>±0.030°C/0.054°F @ 50°C/122°F to 155°C/311°F<br><br>50 mm / 1.97 inch axial homogeneity:<br>±0.035°C/0.063°F @ -45°C/-49°F to 0°C/32°F<br><br>50 mm / 1.97 inch axial homogeneity:<br>±0.020°C/0.036°F @ 0°C/32°F to 50°C/122°F<br><br>50 mm / 1.97 inch axial homogeneity:<br>±0.035°C/0.063°F @ 50°C/122°F to 155°C/311°F<br><br>60 mm / 2.36 inch axial homogeneity:<br>±0.035°C/0.063°F @ -45°C/-49°F to 0°C/32°F<br><br>60 mm / 2.36 inch axial homogeneity:<br>±0.020°C/0.036°F @ 0°C/32°F to 50°C/122°F<br><br>60 mm / 2.36 inch axial homogeneity:<br>±0.035°C/0.063°F @ 50°C/122°F to 155°C/311°F<br><br>70 mm / 2.76 inch axial homogeneity:<br>±0.050°C/0.09°F @ -45°C/-49°F to 0°C/32°F<br><br>70 mm / 2.76 inch axial homogeneity:<br>±0.030°C/0.054°F @ 0°C/32°F to 50°C/122°F<br><br>70 mm / 2.76 inch axial homogeneity:<br>±0.050°C/0.09°F @ 50°C/122°F to 155°C/311°F<br><br>80 mm / 3.15 inch axial homogeneity:<br>±0.070°C/1.26°F @ -45°C/-49°F to 0°C/32°F<br><br>80 mm / 3.15 inch axial homogeneity:<br>±0.040°C/0.072°F @ 0°C/32°F to 50°C/122°F<br><br>80 mm / 3.15 inch axial homogeneity:<br>±0.070°C/1.26°F @ 50°C/122°F to 155°C/311°F<br><br><u>Loaded with 3 x 3mm sensors + 1 x 4mm sensors:</u><br><br>40 mm / 1.57 inch axial homogeneity:<br>±0.030°C/0.054°F @ -45°C/-49°F to 0°C/32°F<br><br>40 mm / 1.57 inch axial homogeneity:<br>±0.020°C/0.036°F @ 0°C/32°F to 50°C/122°F<br><br>40 mm / 1.57 inch axial homogeneity:<br>±0.030°C/0.054°F @ 50°C/122°F to 155°C/311°F |

50 mm / 1.97 inch axial homogeneity:
±0.035°C/0.063°F @ -45°C/-49°F to 0°C/32°F

50 mm / 1.97 inch axial homogeneity:
±0.020°C/0.036°F @ 0°C/32°F to 50°C/122°F

50 mm / 1.97 inch axial homogeneity:
±0.035°C/0.063°F @ 50°C/122°F to 155°C/311°F

60 mm / 2.36 inch axial homogeneity
±0.050°C/0.09°F @ -45°C/-49°F to 0°C/32°F

60 mm / 2.36 inch axial homogeneity:
±0.020°C/0.036°F @ 0°C/32°F to 50°C/122°F

60 mm / 2.36 inch axial homogeneity
±0.050°C/0.09°F @ 50°C/122°F to 155°C/311°F

70 mm / 2.76 inch axial homogeneity:
±0.070°C/1.26°F @ -45°C/-49°F to 0°C/32°F

70 mm / 2.76 inch axial homogeneity:
±0.030°C/0.054°F @ 0°C/32°F to 50°C/122°F

70 mm / 2.76 inch axial homogeneity:
±0.070°C/1.26°F @ 50°C/122°F to 155°C/311°F

80 mm / 3.15 inch axial homogeneity:
±0.120°C/0.216°F @ -45°C/-49°F to 0°C/32°F

80 mm / 3.15 inch axial homogeneity:
±0.050°C/0.09°F @ 0°C/32°F to 50°C/122°F

80 mm / 3.15 inch axial homogeneity:
±0.120°C/0.216°F @ 50°C/122°F to 155°C/311°F

Loaded with 3 x 3mm sensors + 1 x 4mm sensor and 1 x 6 mm sensor

DLC active:

40 mm / 1.57 inch axial homogeneity:
±0.035°C/0.063°F @ -45°C/-49°F to 0°C/32°F

40 mm / 1.57 inch axial homogeneity:
±0.025°C/0.045°F @ 0°C/32°F to 50°C/122°F

40 mm / 1.57 inch axial homogeneity:
±0.035°C/0.063°F @ 50°C/122°F to 155°C/311°F

50 mm / 1.97 inch axial homogeneity:
±0.035°C/0.063°F @ -45°C/-49°F to 0°C/32°F

50 mm / 1.97 inch axial homogeneity:
±0.025°C/0.045°F @ 0°C/32°F to 50°C/122°F

50 mm / 1.97 inch axial homogeneity:
±0.035°C/0.063°F @ 50°C/122°F to 155°C/311°F

| | |
|---|---|
| | 60 mm / 2.36 inch axial homogeneity:<br>±0.045°C/0.081°F @ -45°C/-49°F to 0°C/32°F |
| | 60 mm / 2.36 inch axial homogeneity:<br>±0.030°C/0.054°F @ 0°C/32°F to 50°C/122°F |
| | 60 mm / 2.36 inch axial homogeneity:<br>±0.045°C/0.081°F @ 50°C/122°F to 155°C/311°F |
| | 70 mm / 2.76 inch axial homogeneity:<br>±0.060°C/0.11°F @ -45°C/-49°F to 0°C/32°F |
| | 70 mm / 2.76 inch axial homogeneity:<br>±0.040°C/0.072°F @ 0°C/32°F to 50°C/122°F |
| | 70 mm / 2.76 inch axial homogeneity:<br>±0.060°C/0.11°F @ 50°C/122°F to 155°C/311°F |
| | 80 mm / 3.15 inch axial homogeneity:<br>±0.100°C/0.18°F @ -45°C/-49°F to 0°C/32°F |
| | 80 mm / 3.15 inch axial homogeneity:<br>±0.050°C/0.09°F @ 0°C/32°F to 50°C/122°F |
| | 80 mm / 3.15 inch axial homogeneity:<br>±0.100°C/0.18°F @ 50°C/122°F to 155°C/311°F |
| | Difference between borings : |
| | 0.01°C (0.02°F) |
| | Influence from load : |
| | 0.10°C (0.18°F) |
| | Influence from load with Ext. Reference : |
| | 0.01°C / 0.02°F |
| | Long term drift (1 year) : |
| | ±0.04°C / ±0.07°F |
| Calibration accuracy (test limit) | ±0.04°C / ±0.07°F |
| Temperature coefficient | ±0.005°C/°C (0-20°C and 26-40°C) / ±0.009°F/°F (32-68°F and 79-104°F) |
| Stability | ±0.005°C / ±0.009°F |
| Accuracy | ±0.10°C / ±0.18°F |
| Heating time incl. insert | -45°C / -49.0°F to 23°C / 73.4°F : 7 min. |
| | 23°C / 73.4°F to 100°C / 212°F : 8 min. |
| | 100°C / 212°F to 155°C / 311°F 9 min. |

| THERMAL SPECIFICATIONS | RTC-157 A/B/C | |
|---|---|---|
| | -45°C / -49.0°F to 155°C / 311°F : | 24 min. |
| Time to stability | 10 min. | |
| Cooling time incl. insert | 155°C / 311°F to 100°C / 212°F: | 5 min. |
| | 100°C / 212°F to 23°C / 73.4°F: | 10 min. |
| | 23°C / 73.4°F to –0°C / 32°F : | 5 min. |
| | 0°C / 32°F to –30°C / -22.0°F | 12 min. |
| | -30°C / -22.0°F to –45°C / -49.0°F: | 25 min. |
| | 155°C / 311°F to –45°C / -49.0°F : | 57 min. |

| MECHANICAL SPECIFICATIONS | RTC-158 A/B/C |
|---|---|
| Dimensions l × w × h | 366 × 171 × 363 mm / 14.4 x 6.7 x 14.3 inch |
| Weight | RTC-158 A : 10.9 kg / 24.0 lb<br>RTC-158 B/C : 11.0 kg / 24.3 lb |
| Shipping dimensions | 580 x 250 x 500mm / 22.8 x 9.8 x 19.7 inch (Cardboard box)<br>550 x 430 x 660mm / 21.7 x 16.9 x 26.0 inch (Carrying case in cardboard box) |
| Shipping weight | RTC-158 A : 16.9 kg / 37.2 lb (in cardboard box)<br>RTC-158 B/C : 17.0 kg / 37.5 lb (in cardboard box)<br>RTC-158 A : 27.9 kg / 61.5 lb (in carrying case in cardboard box)<br>RTC-158 B/C : 28.0 kg / 61.7 lb (in carrying case in cardboard box) |
| Bore diameter/depth of well | Ø63.8 mm / 160 mm – ø2.5 inch / 6.3 inch |
| Weight non-drilled insert | 1200 g / 42.3 oz |
| **POWER SUPPLY** | |
| Line voltage/frequency | 90-127VAC / 180-254VAC 47-63 Hz |
| Power consumption | 400 W |
| Type of connection | IEC320 |
| **COMMUNICATION INTERFACES** | |
| Type of connections | USB A, USB B, SD card slot, RJ45 |

| MECHANICAL SPECIFICATIONS | RTC-158 A/B/C |
|---|---|
| **OTHER CONNECTIONS** | |
| Syncronisation relay output | 3,5 mm mini jack. |
| **ENVIRONMENT** | |
| Ambient operating temperature range | 0-40°C / 32-104°F |
| Storage temperature range | -20-50°C / -4-122°F |
| Humidity range | 0-90% RH. |
| Protection class | IP10 |
| Electromagnetic environment | Designed for use in basic electromagnetic environment as defined in EN61326-1 : 2013. Length of test cables should not exceed 3 m. |
| **READOUT SPECIFICATIONS** | |
| Resolution | 0.001°C / 0.001°F / 0.001 K |
| Temperature units | °C / °F / K |

| THERMAL SPECIFICATIONS – DRY BLOCK | RTC-158 A/B/C |
|---|---|
| Maximum temperature | 155°C / 311°F |
| Minimum temperature | -37°C / -34.6°F @ ambient temperature 0°C / 32°F<br>-22°C / -7.6°F @ ambient temperature 23°C / 73.4°F<br>-9°C / -15.8°F @ ambient temperature 40°C / 104°F |

| THERMAL SPECIFICATIONS – DRY BLOCK | RTC-158 A/B/C |
|---|---|
| Well specifications | Loaded with 2 x 3mm sensors:<br><br>40 mm / 1.57 inch axial homogeneity:<br>±0.025°C/0.045°F@ -22°C/-7.6°F to 0°C/32°F<br><br>40 mm / 1.57 inch axial homogeneity:<br>±0.020°C/0.036°F @ 0°C/32°F to 50°C/122°F<br><br>40 mm / 1.57 inch axial homogeneity:<br>±0.030°C/0.054°F @ 50°C/122°F to 155°C/311°F<br><br>50 mm / 1.97 inch axial homogeneity:<br>±0.025°C/0.045°F @ -22°C/-7.6°F to 0°C/32°F<br><br>50 mm / 1.97 inch axial homogeneity:<br>±0.020°C/0.036°F @ 0°C/32°F to 50°C/122°F<br><br>50 mm / 1.97 inch axial homogeneity:<br>±0.030°C/0.054°F @ 50°C/122°F to 155°C/311°F<br><br>60 mm / 2.36 inch axial homogeneity:<br>±0.025°C/0.045°F@ -22°C/-7.6°F to 0°C/32°F<br><br>60 mm / 2.36 inch axial homogeneity:<br>±0.020°C/0.036°F @ 0°C/32°F to 50°C/122°F<br><br>60 mm /2.36 inch axial homogeneity:<br>±0.030°C/0.054°F @ 50°C/122°F to 155°C/311°F<br><br>70 mm / 2.76 inch axial homogeneity:<br>±0.025°C/0.045°F@ -22°C/-7.6°F to 0°C/32°F<br><br>70 mm / 2.76 inch axial homogeneity:<br>±0.025°C/0.045°F @ 0°C/32°F to 50°C/122°F<br><br>70 mm / 2.76 inch axial homogeneity:<br>±0.050°C/0.09°F @ 50°C/122°F to 155°C/311°F<br><br>80 mm / 3.15 inch axial homogeneity:<br>±0.050°C/0.09°F @ -22°C/-7.6°F to 0°C/32°F<br><br>80 mm / 3.15 inch axial homogeneity:<br>±0.040°C/0.072°F @ 0°C/32°F to 50°C/122°F<br><br>80 mm / 3.15 inch axial homogeneity:<br>±0.075°C/0.135°F @ 50°C/122°F to 155°C/311°F |

| THERMAL SPECIFICATIONS – DRY BLOCK | RTC-158 A/B/C |
|---|---|
| Well specifications | Loaded with 3 x 3mm sensors + 1 x 4mm sensor and 1 x 6 mm sensor<br><br>DLC active:<br><br>40 mm / 1.57 inch axial homogeneity:<br>±0.035°C/0.063°F @ -22°C/-7.6°F to 0°C/32°F<br><br>40 mm / 1.57 inch axial homogeneity:<br>±0.025°C/0.045°F @ 0°C/32°F to 50°C/122°F<br><br>40 mm / 1.57 inch axial homogeneity:<br>±0.035°C/0.063°F @ 50°C/122°F to 155°C/311°F<br><br>50 mm / 1.97 inch axial homogeneity:<br>±0.035°C/0.063°F @ -22°C/-7.6°F to 0°C/32°F<br><br>50 mm / 1.97 inch axial homogeneity:<br>±0.025°C/0.045°F @ 0°C/32°F to 50°C/122°F<br><br>50 mm / 1.97 inch axial homogeneity:<br>±0.035°C/0.063°F @ 50°C/122°F to 155°C/311°F<br><br>60 mm / 2.36 inch axial homogeneity:<br>±0.035°C/0.063°F @ -22°C/-7.6°F to 0°C/32°F<br><br>60 mm / 2.36 inch axial homogeneity:<br>±0.030°C/0.054°F @ 0°C/32°F to 50°C/122°F<br><br>60 mm / 2.36 inch axial homogeneity:<br>±0.035°C/0.063°F @ 50°C/122°F to 155°C/311°F<br><br>70 mm / 2.76 inch axial homogeneity:<br>±0.045°C/0.081°F @ -22°C/-7.6°F to 0°C/32°F<br><br>70 mm / 2.76 inch axial homogeneity:<br>±0.040°C/0.072°F @ 0°C/32°F to 50°C/122°F<br><br>70 mm / 2.76 inch axial homogeneity:<br>±0.045°C/0.081°F @ 50°C/122°F to 155°C/311°F<br><br>80 mm / 3.15 inch axial homogeneity:<br>±0.060°C/0.11°F @ -22°C/-7.6°F to 0°C/32°F<br><br>80 mm / 3.15 inch axial homogeneity:<br>±0.050°C/0.09°F @ 0°C/32°F to 50°C/122°F<br><br>80 mm / 3.15 inch axial homogeneity:<br>±0.060°C/0.11°F @ 50°C/122°F to 155°C/311°F |

| THERMAL SPECIFICATIONS – DRY BLOCK | RTC-158 A/B/C | |
|---|---|---|
| | Difference between borings: | |
| | 0.05°C / 0.09°F@155°C / 311°F<br>0.03°C / 0.054°F @-22°C / -8°F | |
| | Influence from load: | |
| | 0.15°C / 0.27°F @155°C / 311°F<br>0.07°C / 0.13°F @-22°C / -8°F | |
| | Influence from load with Ext. Reference : | |
| | 0.04°C / 0.07°F @155°C / 311°F<br>0.04°C / 0.07°F @-22°C / -8°F | |
| | Long term drift (1 year): ±0.05°C / ±0.09°F | |
| Calibration accuracy (test limit) | ±0.05°C / ±0.09°F | |
| Temperature coefficient | ±0.010°C/°C (0-20°C and 26-40°C) /<br>±0.010°F/°F (32-68°F and 79-104°F) | |
| Stability | ±0.01°C / ±0.02°F | |
| Reference accuracy | ±0.02°C / ±0.04°F | |
| Total accuracy | ±0.18°C / ±0.32°F | |
| Heating time incl. insert | -22°C / -7.6°F to 23°C / 73.4°F : | 9 min. |
| | 23°C / 73.4°F to 100°C / 212°F: | 23 min. |
| | 100°C / 212°F to 155°C / 311°F: | 28 min. |
| | -22°C / -7.6°F to 155°C / 311°F : | 60 min. |
| Time to stability | 30 min. | |
| Cooling time incl. insert | 155°C / 311°F to 100°C / 212°F : | 9 min |
| | 100°C / 212°F to 23°C / 73.4°F: | 24 min. |
| | 23°C / 73.4°F to 0°C / 32°F: | 15 min. |
| | 0°C / 32°F to –15°C / 5°F: | 21 min. |
| | -15°C / -5°F to –22°C / -7.6°F : | 25 min. |
| | 155°C / 311°F to –22°C / -7.6°F : | 94 min. |

| THERMAL SPECIFICATIONS – LIQUID BATHS | RTC-158 A/B/C |
|---|---|
| Maximum temperature | 155°C / 311°F |
| Minimum temperature | -37°C / -35°F @ ambient temperature 0°C / 32°F<br><br>-22°C / -7.6°F @ ambient temperature 23°C / 73.4°F<br><br>-9°C / -15.8°F @ ambient temperature 40°C / 104°F |
| Well specifications | 40 mm / 1.57 inch axial homogeneity:<br>±0,01°C/0.02°F @ 155°C/311°F<br>±0,01°C/0.02°F @ -22°C/-7.6°F<br><br>50 mm / 1.97 inch axial homogeneity:<br>±0,01°C/0.02°F @ 155°C/311°F<br>±0,01°C/0.02°F @ -22°C/-7.6°F<br><br>60 mm / 2.36 inch axial homogeneity:<br>±0,01°C/0.02°F @ 155°C/311°F<br>±0,02°C/0.02°F @ -22°C/-7.6°F<br><br>70 mm / 2.76 inch axial homogeneity:<br>±0,03°C/0.02°F @ 155°C/311°F<br>±0,02°C/0.02°F @ -22°C/-7.6°F<br><br>80 mm / 3.15 inch axial homogeneity:<br>±0,05°C/0.02°F @ 155°C/311°F<br>±0,03°C/0.02°F @ -22°C/-7.6°F<br><br>Radial homogeneity: 0.015°C/0.027°F<br><br>Influence from load:<br><br>0.10°C/0.18°F @ 155°C/311°F<br>0.04°C/0.07°F @ -22°C/-7.6°F<br><br>Influence from load with ext. reference:<br><br>0.02°C/0.04°F @ 155°C/311°F<br>0.02°C/0.04°F @ -22°C/-7.6°F<br><br>Difference between insert/oil: 0.20°C/0.36°F<br><br>Long term drift (1 year) : ±0.05°C/0.09°F |
| Calibration accuracy (test limit) | ±0.05°C / ±0.20°F |
| Temperature coefficient | 0.010°C/°C (0-40°C) / 0.010°F/°F(32-104°F) |
| Stability | ±0.01°C / ±0.02°F |
| Reference accuracy | ±0.02°C / ±0.04°F |
| Total accuracy (std. cal. with insert) | ±0.30°C / ±0.54°F |
| Time to stability | 15 min. |

| THERMAL SPECIFICATIONS – LIQUID BATHS | RTC-158 A/B/C |
|---|---|

| MECHANICAL SPECIFICATIONS | RTC-159 A/B/C |
|---|---|
| Dimensions l × w × h | 531 × 171 × 432mm / 20.9 x 6.7 x 17 inch |
| Weight | RTC-159 A : 15.0 kg / 33.1 lb<br>RTC-159 B : 15.2 kg / 33.5 lb<br>RTC-159 C : 15.1 kg / 33.3 lb |
| Bore diameter/depth of well | ø30 mm / 185 mm – ø1.18 inch / 7.28 inch |
| Insert dimensions | ø29.7 mm x 150 mm / ø1.17 inch / 5.91 inch |
| Sensor immersion depth :<br>from top of insert<br>from top of insulation plug | <br>140 mm / 5.51 inch<br>190 mm / 7.48 inch |
| Weight non-drilled insert | 290 g / 10.2 oz |
| **POWER SUPPLY** | |
| Line voltage/frequency | 90-127VAC / 180-254VAC 47-63 Hz |
| Power consumption | 450 VA |
| Type of connection | IEC320 |
| **COMMUNICATION INTERFACES** | |
| Type of connections | USB A, USB B, SD card slot, RJ45 |
| **OTHER CONNECTIONS** | |
| Syncronisation relay output | 3,5 mm mini jack. |
| **ENVIRONMENT** | |
| Ambient operating temperature range | 0-40°C / 32-104°F |
| Storage temperature range | -10-50°C / 14-122°F |
| Humidity range | 0-90% RH. |
| Protection class | IP10 |
| Electromagnetic environment | Designed for use in basic and industrial electromagnetic environment as defined in EN61326-1 : 2013. Length of test cables should not exceed 3 m. |

| MECHANICAL SPECIFICATIONS | RTC-159 A/B/C |
|---|---|
| **READOUT SPECIFICATIONS** | |
| Resolution | 0.001°C / 0.001°F / 0.001 K |
| Temperature units | °C / °F / K |

| THERMAL SPECIFICATIONS | RTC-159 A/B/C |
|---|---|
| Maximum temperature | 155°C / 311°F |
| Minimum temperature * | -100°C / -148°F @ ambient temperature 0°C / 32°F |
| | -100°C / -148°F @ ambient temperature 23°C / 73.4°F |
| | -83°C / -117.4°F@ ambient temperature 40°C / 104°F |

*The minimum temperature will be affected by the number of sensors and the dimensions of the sensors being calibrated.

| THERMAL SPECIFICATIONS | RTC-159 A/B/C |
|---|---|
| Well specifications | <u>Loaded with 2 x 3mm + 1 x 6mm sensors:</u><br><br>40 mm / 1.57 inch axial homogeneity:<br>±0.070°C/0.126°F @ -100°C/-148°F to 23°C/73.4°F<br><br>40 mm / 1.57 inch axial homogeneity:<br>±0.050°C/0.09°F @ 23°C/73.4°F to 125°C/257°F<br><br>40 mm / 1.57 inch axial homogeneity:<br>±0.050°C/0.09°F @ 125°C/257°F to 155°C/311°F<br><br>50 mm / 1.97 inch axial homogeneity:<br>±0.100°C/0.18°F @ -100°C/-148°F to 23°C/73.4°F<br><br>50 mm / 1.97 inch axial homogeneity:<br>±0.050°C/0.09°F @ 23°C/73.4°F to 125°C/257°F<br><br>50 mm / 1.97 inch axial homogeneity:<br>±0.050°C/0.09°F @ 125°C/257°F to 155°C/311°F<br><br>60 mm / 2.36 inch axial homogeneity:<br>±0.150°C/0.27°F @ -100°C/-148°F to 23°C/73.4°F<br><br>60 mm / 2.36 inch axial homogeneity:<br>±0.050°C/0.09°F @ 23°C/73.4°F to 125°C/257°F<br><br>60 mm / 2.36 inch axial homogeneity:<br>±0.050°C/0.09°F @ 125°C/257°F to 155°C/311°F<br><br>70 mm / 2.76 inch axial homogeneity:<br>±0.200°C/0.36°F @ -100°C/-148°F to 23°C/73.4°F<br><br>70 mm / 2.76 inch axial homogeneity:<br>±0.050°C/0.09°F @ 23°C/73.4°F to 125°C/257°F<br><br>70 mm / 2.76 inch axial homogeneity:<br>±0.050°C/0.09°F @ 125°C/257°F to 155°C/311°F<br><br>80 mm / 3.15 inch axial homogeneity:<br>±0.400°C/0.72°F @ -100°C/-148°F to 23°C/73.4°F<br><br>80 mm / 3.15 inch axial homogeneity:<br>±0.050°C/0.09°F @ 23°C/73.4°F to 125°C/257°F<br><br>80 mm / 3.15 inch axial homogeneity:<br>±0.050°C/0.09°F @ 125°C/257°F to 155°C/311°F<br><br><u>Loaded with 3 x 3mm sensors + 1 x 4mm sensor and 1 x 6 mm sensor</u><br><br><u>DLC active:</u><br><br>40 mm / 1.57 inch axial homogeneity:<br>±0.070°C/0.126°F @ -100°C/-148°F to 23°C/73.4°F<br><br>40 mm / 1.57 inch axial homogeneity:<br>±0.050°C/0.09°F @ 23°C/73.4°F to 125°C/257°F<br><br>40 mm / 1.57 inch axial homogeneity: |

| THERMAL SPECIFICATIONS | RTC-159 A/B/C |
|---|---|
| | ±0.050°C/0.09°F @ 125°C/257°F to 155°C/311°F |
| | 50 mm / 1.97 inch axial homogeneity:<br>±0.100°C/0.18°F @ -100°C/-148°F to 23°C/73.4°F |
| | 50 mm / 1.97 inch axial homogeneity:<br>±0.050°C/0.09°F @ 23°C/73.4°F to 125°C/257°F |
| | 50 mm / 1.97 inch axial homogeneity:<br>±0.050°C/0.09°F @ 125°C/257°F to 155°C/311°F |
| | 60 mm / 2.36 inch axial homogeneity:<br>±0.150°C/0.27°F @ -100°C/-148°F to 23°C/73.4°F |
| | 60 mm / 2.36 inch axial homogeneity:<br>±0.050°C/0.09°F @ 23°C/73.4°F to 125°C/257°F |
| | 60 mm / 2.36 inch axial homogeneity:<br>±0.050°C/0.09°F @ 125°C/257°F to 155°C/311°F |
| | 70 mm / 2.76 inch axial homogeneity:<br>±0.200°C/0.36°F @ -100°C/-148°F to 23°C/73.4°F |
| | 70 mm / 2.76 inch axial homogeneity:<br>±0.050°C/0.09°F @ 23°C/73.4°F to 125°C/257°F |
| | 70 mm / 2.76 inch axial homogeneity:<br>±0.050°C/0.09°F @ 125°C/257°F to 155°C/311°F |
| | 80 mm / 3.15 inch axial homogeneity:<br>±0.400°C/0.72°F @ -100°C/-148°F to 23°C/73.4°F |
| | 80 mm / 3.15 inch axial homogeneity:<br>±0.050°C/0.09°F @ 23°C/73.4°F to 125°C/257°F |
| | 80 mm / 3.15 inch axial homogeneity:<br>±0.050°C/0.09°F @ 125°C/257°F to 155°C/311°F |
| | Difference between borings : |
| | 0.01°C / 0.02°F |
| | Influence from load : |
| | 0.20°C / 0.36°F @ -100°C / -148°F<br>0.05°C / 0.09°F @ 155°C / 311°F |
| | Influence from load with Ext. Reference : |
| | 0.01°C / 0.02°F |
| | Long term drift (1 year) : |
| | ±0.10°C / ±0.18°F |
| Calibration accuracy (test limit) | ±0.10°C / ±0.18°F |
| Temperature coefficient | ±0.005°C/°C (0-20°C and 26-40°C) / ±0.009°F/°F |

| THERMAL SPECIFICATIONS | RTC-159 A/B/C | |
|---|---|---|
| | (32-68°F and 79-104°F) | |
| Stability | ±0.030°C / ±0.054°F | |
| Accuracy | ±0.30°C / ±0.54°F | |
| Heating time incl. insert | -100°C / -148.0°F to 23°C / 73.4°F : | 12 min. |
| | 23°C / 73.4°F to 155°C / 311°F : | 14 min. |
| | -100°C / -148°F to 155°C / 311°F | 26 min. |
| Time to stability | 10 min. | |
| Cooling time incl. insert | 155°C / 311°F to 23°C / 73.4°F: | 40 min. |
| | 155°C / 311°F to -100°C / -148°F: | 180 min. |
| | 23°C / 73.4°F to –80°C / -112°F : | 65 min. |
| | -80°C / -112°F to –90°C / -130°F | 20 min. |
| | -90°C / -130°F to –100°C / -148°F: | 50 min. |
| | 23°C / 73.4°F to –100°C / -148°F : | 135 min. |
| Refrigerants | R-704 (Helium) : | 8 g / 0.3 oz |
| | R-1270 (Propylene) : | 8 g / 0.3 oz |

| MECHANICAL SPECIFICATIONS | RTC-187 A/B/C |
|---|---|
| Dimensions l × w × h | 362 × 171 × 363 mm / 14.2 x 6.7 x 14.3 inch |
| Weight | RTC-187 A : 10.4 kg / 23.0 lb<br>RTC-187 B/C : 10.5 kg / 23.1 lb |
| Shipping dimensions | 580 x 250 x 500mm / 22.8 x 9.8 x 19.7 inch (Cardboard box) |
| | 550 x 440 x 610mm / 21.7 x 17.3 x 24.0 inch (Carrying case in cardboard box) |
| Shipping weight | 14.8 kg / 32.6 lb (in cardboard box)<br>20.5 kg / 45.2 lb (in carrying case in cardboard box) |
| Bore diameter/depth of well | ø30 mm / 150 mm – ø1.18 inch / 5.91 inch |
| Weight non-drilled insert | 290 g / 10.2 oz |

| MECHANICAL SPECIFIKATIONS | RTC-187 A/B/C |
|---|---|
| **POWER SUPPLY** | |
| Line voltage/frequency | 90-127VAC / 180-254VAC 47-63 Hz |
| Power consumption | 400 W |
| Type of connection | IEC320 |
| **COMMUNICATION INTERFACES** | |
| Type of connections | USB A, USB B, SD card slot, RJ45 |
| **OTHER CONNECTIONS** | |
| Syncronisation relay output | 3,5 mm mini jack. |
| **ENVIRONMENT** | |
| Ambient operating temperature range | 0-40°C / 32-104°F |
| Storage temperature range | -20-50°C / -4-122°F |
| Humidity range | 0-90% RH. |
| Protection class | IP10 |
| Electromagnetic environment | Designed for use in basic electromagnetic environment as defined in EN61326-1:2013. Length of test cables should not exceed 3 m. |
| **READOUT SPECIFICATIONS** | |
| Resolution | 0.001°C / 0.001°F / 0.001 K |
| Temperature units | °C / °F / K |

| THERMAL SPECIFICATIONS | RTC-187 A/B/C |
|---|---|
| Maximum temperature | 180°C / 356°F |
| Minimum temperature * | -57°C / -70.6°F @ ambient temperature 0°C / 32°F |
| | -45°C / -49°F @ ambient temperature 23°C / 73.4°F |
| | -31°C / -23.8°F@ ambient temperature 40°C / 104°F |

| THERMAL SPECIFICATIONS | RTC-187 A/B/C |
|---|---|
| Well specifications | <u>Loaded with 2 x 3mm sensors:</u><br><br>40 mm / 1.57 inch axial homogeneity:<br>±0.030°C/0.054°F @ -45°C/-49°F to 0°C/32°F<br><br>40 mm / 1.57 inch axial homogeneity:<br>±0.020°C/0.036°F @ 0°C/32°F to 50°C/122°F<br><br>40 mm / 1.57 inch axial homogeneity:<br>±0.030°C/0.054°F @ 50°C/122°F to 180°C/356°F<br><br>50 mm / 1.97 inch axial homogeneity:<br>±0.035°C/0.063°F @ -45°C/-49°F to 0°C/32°F<br><br>50 mm / 1.97 inch axial homogeneity:<br>±0.020°C/0.036°F @ 0°C/32°F to 50°C/122°F<br><br>50 mm / 1.97 inch axial homogeneity:<br>±0.035°C/0.063°F @ 50°C/122°F to 180°C/356°F<br><br>60 mm / 2.36 inch axial homogeneity:<br>±0.035°C/0.063°F @ -45°C/-49°F to 0°C/32°F<br><br>60 mm / 2.36 inch axial homogeneity:<br>±0.020°C/0.036°F @ 0°C/32°F to 50°C/122°F<br><br>60 mm / 2.36 inch axial homogeneity:<br>±0.040°C/0.072°F @ 50°C/122°F to 180°C/356°F<br><br>70 mm / 2.76 inch axial homogeneity:<br>±0.050°C/0.09°F @ -45°C/-49°F to 0°C/32°F<br><br>70 mm / 2.76 inch axial homogeneity:<br>±0.030°C/0.054°F @ 0°C/32°F to 50°C/122°F<br><br>70 mm / 2.76 inch axial homogeneity:<br>±0.050°C/0.09°F @ 50°C/122°F to 180°C/356°F<br><br>80 mm / 3.15 inch axial homogeneity:<br>±0.070°C/1.26°F @ -45°C/-49°F to 0°C/32°F<br><br>80 mm / 3.15 inch axial homogeneity:<br>±0.040°C/0.072°F @ 0°C/32°F to 50°C/122°F<br><br>80 mm / 3.15 inch axial homogeneity:<br>±0.070°C/1.26°F @ 50°C/122°F to 180°C/356°F<br><br><u>Loaded with 3 x 3mm sensors + 1 x 4mm sensors:</u><br><br>40 mm / 1.57 inch axial homogeneity:<br>±0.030°C/0.054°F @ -45°C/-49°F to 0°C/32°F<br><br>40 mm / 1.57 inch axial homogeneity:<br>±0.020°C/0.036°F @ 0°C/32°F to 50°C/122°F<br><br>40 mm / 1.57 inch axial homogeneity:<br>±0.030°C/0.054°F @ 50°C/122°F to 155°C/311°F |

40 mm / 1.57 inch axial homogeneity:
±0.035°C/0.063°F@155°C/311°F to 180°C/356°F

50 mm / 1.97 inch axial homogeneity:
±0.035°C/0.063°F @ -45°C/-49°F to 0°C/32°F

50 mm / 1.97 inch axial homogeneity:
±0.020°C/0.036°F @ 0°C/32°F to 50°C/122°F

50 mm / 1.97 inch axial homogeneity:
±0.035°C/0.063°F @ 50°C/122°F to 155°C/311°F

50 mm / 1.97 inch axial homogeneity:
±0.050°C/0.09°F @ 155°C/311°F to 180°C/356°F

60 mm / 2.36 inch axial homogeneity
±0.050°C/0.09°F @ -45°C/-49°F to 0°C/32°F

60 mm / 2.36 inch axial homogeneity:
±0.020°C/0.036°F @ 0°C/32°F to 50°C/122°F

60 mm / 2.36 inch axial homogeneity
±0.050°C/0.09°F @ 50°C/122°F to 155°C/311°F

60 mm / 2.36 inch axial homogeneity
±0.080°C/0.144°F@155°C/311°F to 180°C/356°F

70 mm / 2.76 inch axial homogeneity:
±0.070°C/0.126°F @ -45°C/-49°F to 0°C/32°F

70 mm / 2.76 inch axial homogeneity:
±0.030°C/0.054°F @ 0°C/32°F to 50°C/122°F

70 mm / 2.76 inch axial homogeneity:
±0.070°C/0.126°F @ 50°C/122°F to 155°C/311°F

70 mm / 2.76 inch axial homogeneity:
±0.120°C/0.216°F@155°C/311°F to 180°C/356°F

80 mm / 3.15 inch axial homogeneity:
±0.120°C/0.216°F @ -45°C/-49°F to 0°C/32°F

80 mm / 3.15 inch axial homogeneity:
±0.050°C/0.09°F @ 0°C/32°F to 50°C/122°F

80 mm / 3.15 inch axial homogeneity:
±0.120°C/0.216°F @ 50°C/122°F to 155°C/311°F

80 mm / 3.15 inch axial homogeneity:
±0.150°C/0.27°F @ 155C/311°F to 180°C/356°F

<u>Loaded with 3 x 3mm sensors + 1 x 4mm sensor and 1 x 6 mm sensor</u>

<u>DLC active:</u>

40 mm / 1.57 inch axial homogeneity:
±0.035°C/0.063°F @ -45°C/-49°F to 0°C/32°F

40 mm / 1.57 inch axial homogeneity:
±0.025°C/0.045°F @ 0°C/32°F to 50°C/122°F

40 mm / 1.57 inch axial homogeneity:
±0.035°C/0.063°F @ 50°C/122°F to 180°C/356°F

50 mm / 1.97 inch axial homogeneity:
±0.035°C/0.063°F @ -45°C/-49°F to 0°C/32°F

50 mm / 1.97 inch axial homogeneity:
±0.025°C/0.045°F @ 0°C/32°F to 50°C/122°F

50 mm / 1.97 inch axial homogeneity:
±0.035°C/0.063°F @ 50°C/122°F to 180°C/356°F

60 mm / 2.36 inch axial homogeneity:
±0.045°C/0.081°F @ -45°C/-49°F to 0°C/32°F

60 mm / 2.36 inch axial homogeneity:
±0.030°C/0.054°F @ 0°C/32°F to 50°C/122°F

60 mm / 2.36 inch axial homogeneity:
±0.045°C/0.081°F @ 50°C/122°F to 180°C/356°F

70 mm / 2.76 inch axial homogeneity:
±0.060°C/0.11°F @ -45°C/-49°F to 0°C/32°F

70 mm / 2.76 inch axial homogeneity:
±0.040°C/0.072°F @ 0°C/32°F to 50°C/122°F

70 mm / 2.76 inch axial homogeneity:
±0.060°C/0.11°F @ 50°C/122°F to 180°C/356°F

80 mm / 3.15 inch axial homogeneity:
±0.100°C/0.18°F @ -45°C/-49°F to 0°C/32°F

80 mm / 3.15 inch axial homogeneity:
±0.050°C/0.09°F @ 0°C/32°F to 50°C/122°F

80 mm / 3.15 inch axial homogeneity:
±0.100°C/0.18°F @ 50°C/122°F to 180°C/356°F

Difference between borings :

0.01°C (0.02°F)

Influence from load :

0.10°C (0.18°F) @ -45°C/-49°F to 155°C/311°F

0.11°C (0.20°F) @ 155°C/311°F to 180°C/356°F

Influence from load with Ext. Reference :

0.01°C / 0.02°F

Long term drift (1 year) :

±0.04°C / ±0.07°F

| THERMAL SPECIFICATIONS | RTC-187 A/B/C | |
|---|---|---|
| Calibration accuracy (test limit) | ±0.04°C / ±0.07°F | |
| Temperature coefficient | ±0.005°C/°C (0-20°C and 26-40°C) / ±0.009°F/°F (32-68°F and 79-104°F) | |
| Stability | ±0.005°C / ±0.009°F | |
| Accuracy | ±0.10°C / ±0.18°F @ -45°C/-49°F to 155°C/311°F | |
| | ±0.12°C / ±0.22°F @ 155°C/311°F to 180°C/356°F | |
| Heating time incl. insert | -45°C / -49.0°F to 23°C / 73.4°F : | 7 min. |
| | 23°C / 73.4°F to 100°C / 212°F : | 8 min. |
| | 100°C / 212°F to 180°C / 356°F | 9 min. |
| | -45°C / -49.0°F to 180°C / 311°F : | 24 min. |
| Time to stability | 10 min. | |
| Cooling time incl. insert | 180°C / 356°F to 100°C / 212°F: | 8 min. |
| | 100°C / 212°F to 23°C / 73.4°F: | 11 min. |
| | 23°C / 73.4°F to –0°C / 32°F : | 5 min. |
| | 0°C / 32°F to –30°C / -22.0°F | 12 min. |
| | -30°C / -22.0°F to –45°C / -49.0°F: | 25 min. |
| | 180°C / 356°F to –45°C / -49.0°F : | 61 min. |

| MECHANICAL SPECIFICATIONS | RTC-250 A/B/C |
|---|---|
| Dimensions l × w × h | 366 × 171 × 363 mm / 14.4 x 6.7 x 14.3 inch |
| Weight | RTC-250 A : 9.8 kg / 21.6 lb<br>RTC-250 B/C : 9.9 kg / 21.8 lb |
| Shipping dimensions | 580 x 250 x 500mm / 22.8 x 9.8 x 19.7 inch (Cardboard box) |
| | 550 x 430 x 660mm / 21.7 x 16.9 x 26.0 inch (Carrying case in cardboard box) |
| Shipping weight | RTC-250 A : 15.8 kg / 34.8 lb (in cardboard box)<br>RTC-250 B/C : 15.9 kg / 35.1 lb (in cardboard box)<br>RTC-250 A : 26.8 kg / 59.1 lb (in carrying case in cardboard box)<br>RTC-250 B/C : 26.9 kg / 59.3 lb (in carrying case in cardboard box) |

| MECHANICAL SPECIFICATIONS | RTC-250 A/B/C |
|---|---|
| Bore diameter/depth of well | Ø63.8 mm / 160 mm – ø2.5 inch / 6.3 inch |
| Weight non-drilled insert | 1200 g / 42.3 oz |
| **POWER SUPPLY** | |
| Line voltage/frequency | 90-127VAC / 180-254VAC 47-63 Hz, 8A/4A |
| Power consumption | 1150 W |
| Type of connection | IEC320 |
| **COMMUNICATION INTERFACES** | |
| Type of connections | USB A, USB B, SD card slot, RJ45 |
| **OTHER CONNECTIONS** | |
| Syncronisation relay output | 3,5 mm mini jack. |
| **ENVIRONMENT** | |
| Ambient operating temperature range | 0-40°C / 32-104°F |
| Storage temperature range | -20-50°C / -4-122°F |
| Humidity range | 0-90% RH. |
| Protection class | IP10 |
| Electromagnetic environment | Designed for use in basic electromagnetic environment as defined in EN61326-1 : 2013. Length of test cables should not exceed 3 m. |
| **READOUT SPECIFICATIONS** | |
| Resolution | 0.001°C / 0.001°F / 0.001 K |
| Temperature units | °C / °F / K |

| THERMAL SPECIFICATIONS – DRY – BLOCK | RTC-250 A/B |
|---|---|
| Maximum temperature | 250°C / 482°F |
| Minimum temperature | 5°C / 41°F @ ambient temperature 0°C / 32°F |
| | 28°C / 82°F @ ambient temperature 23°C / 73.4°F |
| | 45°C / 113°F@ ambient temperature 40°C / 104°F |

| THERMAL SPECIFICATIONS – DRY – BLOCK | RTC-250 A/B |
|---|---|
| Well specifications | Loaded with 2 x 3mm sensors:<br><br>40 mm / 1.57 inch axial homogeneity:<br>±0.030°C/0.054°F@ 28°C/82.4°F to 150°C/302°F<br><br>40 mm / 1.57 inch axial homogeneity:<br>±0.050°C/0.09°F @ 150°C/302°F to 250°C/482°F<br><br>50 mm / 1.97 inch axial homogeneity:<br>±0.050°C/0.09°F @ 28°C/82.4°F to 150°C/302°F<br><br>50 mm / 1.97 inch axial homogeneity:<br>±0.100°C/0.18°F @ 150°C/302°F to 250°C/482°F<br><br>60 mm / 2.36 inch axial homogeneity:<br>±0.060°C/0.11°F@ 28°C/82.4°F to 150°C/302°F<br><br>60 mm / 2.36 inch axial homogeneity:<br>±0.120°C/0.22°F @ 150°C/302°F to 250°C/482°F<br><br>70 mm / 2.76 inch axial homogeneity:<br>±0.100°C/0.18°F@ 28°C/82.4°F to 150°C/302°F<br><br>70 mm / 2.76 inch axial homogeneity:<br>±0.200°C/0.36°F @ 150°C/302°F to 250°C/482°F<br><br>80 mm / 3.15 inch axial homogeneity:<br>±0.120°C/0.22°F @ 28°C/82.4°F to 150°C/302°F<br><br>80 mm / 3.15 inch axial homogeneity:<br>±0.250°C/0.45°F @ 150°C/302°F to 250°C/482°F<br><br>Loaded with 3 x 3mm sensors + 1 x 4mm sensor and 1 x 6 mm sensor<br><br>DLC active:<br><br>40 mm / 1.57 inch axial homogeneity:<br>±0.040°C/0.072°F@ 28°C/82.4°F to 150°C/302°F<br><br>40 mm / 1.57 inch axial homogeneity:<br>±0.060°C/0.11°F @ 150°C/302°F to 250°C/482°F<br><br>50 mm / 1.97 inch axial homogeneity:<br>±0.050°C/0.09°F @ 28°C/82.4°F to 150°C/302°F<br><br>50 mm / 1.97 inch axial homogeneity:<br>±0.070°C/0.13°F @ 150°C/302°F to 250°C/482°F<br><br>60 mm / 2.36 inch axial homogeneity:<br>±0.060°C/0.11°F @ 28°C/82.4°F to 150°C/302°F<br><br>60 mm / 2.36 inch axial homogeneity:<br>±0.100°C/0.18°F @ 150°C/302°F to 250°C/482°F |

| THERMAL SPECIFICATIONS – DRY – BLOCK | RTC-250 A/B |
|---|---|
| Well specifications | 70 mm / 2.76 inch axial homogeneity:<br>±0.070°C/0.13°F @ 28°C/82.4°F to 150°C/302°F<br><br>70 mm / 2.76 inch axial homogeneity:<br>±0.120°C/0.22°F@150°C/302°F to 250°C/482°F<br><br>80 mm / 3.15 inch axial homogeneity:<br>±0.080°C/0.14°F @ 28°C/82.4°F to 150°C/302°F<br><br>80 mm / 3.15 inch axial homogeneity:<br>±0.150°C/0.27°F @ 150°C/302°F to 250°C/482°F<br><br>Difference between borings :<br><br>0.05°C / 0.09°F<br><br>Influence from load :<br><br>0.10°C / 0.18°F @250°C / 482°F<br><br>Influence from load with Ext. Reference :<br><br>0.03°C / 0.05°F @250°C / 482°F<br><br>Long term drift (1 year) :<br><br>±0.05°C / ±0.09°F |
| Calibration accuracy (test limit) | ±0.08°C / ±0.14°F |
| Temperature coefficient | ±0.020°C/°C (0-20°C and 26-40°C) (32-68°F and 79-104°F) |
| Stability | ±0.02°C / ±0.04°F |
| Reference accuracy | ±0.06°C (±0.11°F) |
| Total accuracy | ±0.28°C (±0.50°F) |
| Heating time incl. insert | 28°C / 82°F to 100°C / 212°F : 3 min.<br>50°C / 122°F to 100°C / 212°F : 2 min.<br>100°C / 212°F to 250°C / 482°F : 9 min. |
| Time to stability | 15 min. |
| Cooling time incl. insert | 250°C / 482°F to 100°C / 212°F : 24 min.<br>100°C / 212°F to 50°C / 122°F : 24 min.<br>100°C / 212°F to 28°C / 82°F : 65 min. |

| THERMAL SPECIFICATIONS – LIQUID BATHS | RTC-250 A/B |
|---|---|
| Maximum temperature | 250°C / 482°F |
| Minimum temperature | 45°C / 113°F@ambient temperature 40°C / 104°F |
| | 28°C / 82°F@ambient temperature 23°C / 73.4°F |
| | 5°C / 4°F@ ambient temperature 0°C / 32°F |

| THERMAL SPECIFICATIONS – LIQUID BATHS | RTC-250 A/B |
|---|---|
| Well specifications | 40 mm / 1.57 inch axial homogeneity:<br>±0.010°C/0.018°F@ 28°C/82.4°F to 150°C/302°F<br><br>40 mm / 1.57 inch axial homogeneity:<br>±0.020°C/0.036°F@150°C/302°F to 250°C/482°F<br><br>50 mm / 1.97 inch axial homogeneity:<br>±0.010°C/0.018°F@ 28°C/82.4°F to 150°C/302°F<br><br>50 mm / 1.97 inch axial homogeneity:<br>±0.020°C/0.036°F@150°C/302°F to 250°C/482°F<br><br>60 mm / 2.36 inch axial homogeneity:<br>±0.010°C/0.018°F@ 28°C/82.4°F to 150°C/302°F<br><br>60 mm / 2.36 inch axial homogeneity:<br>±0.020°C/0.036°F@150°C/302°F to 250°C/482°F<br><br>70 mm / 2.76 inch axial homogeneity:<br>±0.025°C/0.045°F@ 28°C/82.4°F to 150°C/302°F<br><br>70 mm / 2.76 inch axial homogeneity:<br>±0.025°C/0.045°F@150°C/302°F to 250°C/482°F<br><br>80 mm / 3.15 inch axial homogeneity:<br>±0.025°C/0.045°F@ 28°C/82.4°F to 150°C/302°F<br><br>80 mm / 3.15 inch axial homogeneity:<br>±0.050°C/0.09°F @ 150°C/302°F to 250°C/482°F<br><br>Radial homogeneity:<br><br>0.015°C / 0.027°F<br><br>Influence from load :<br><br>0.10°C / 0.18°F @250°C / 482°F<br><br>Influence from load with Ext. Reference :<br><br>0.02°C / 0.04°F @250°C / 482°F<br><br>Difference between insert/oil :<br><br>0.30°C / 0.54°F<br><br>Long term drift (1 year) :<br><br>±0.05°C / ±0.09°F |

| THERMAL SPECIFICATIONS – LIQUID BATHS | RTC-250 A/B |
|---|---|
| Calibration accuracy (test limit) | ±0.06°C / ±0.20°F |
| Temperature coefficient | ±0.020°C/°C (0-20°C and 26-40°C) (32-68°F and 79-104°F) |
| Stability | ±0.02°C / ±0.04°F |
| Reference accuracy | ±0.06°C / ±0.11°F |
| Total accuracy (std. cal. with insert) | ±0.50°C / ±0.90°F |
| Heating time incl. insert | Not specified |
| Time to stability | 15 min. |
| Cooling time incl. insert | Not specified |

| MECHANICAL SPECIFICATIONS | RTC-700 A/B/C |
|---|---|
| Dimensions l × w × h | 362 × 171 × 421 mm (14.3 x 6.7 x 16.6 inch) |
| Weight | 11.3 kg / 24.9 lb |
| Shipping dimensions | 580 x 250 x 500mm / 22.8 x 9.8 x 19.7 inch (Cardboard box) |
| | 550 x 430 x 660mm / 21.7 x 16.9 x 26.0 inch (Carrying case in cardboard box) |
| Shipping weight | 16.3 kg / 36.0 lb (in cardboard box) |
| | 27.3 kg / 60.2 lb (in carrying case in cardboard box) |
| Bore diameter/depth of well | ø30 mm / 210 mm – ø1.18 inch / 8.3 inch |
| Weight non-drilled insert | 1060 g / 37.3 oz |
| **POWER SUPPLY** | |
| Line voltage/frequency | 90-127VAC / 180-254VAC 47-63 Hz |
| Power consumption | 1150 W |
| Type of connection | IEC320 |
| **COMMUNICATION INTERFACES** | |
| Type of connection | USB A, USB B, SD card slot, RJ45 |
| **OTHER CONNECTIONS** | |
| Syncronisation relay output | 3,5 mm mini jack. |

| MECHANICAL SPECIFICATIONS | RTC-700 A/B/C |
|---|---|

| | |
|---|---|
| **ENVIRONMENT** | |
| Ambient operating temperature range | 0-40°C / 32-104°F |
| Storage temperature range | -20-50°C / -4-122°F |
| Humidity range | 0-90% RH. |
| Protection class | IP10 |
| Electromagnetic environment | Designed for use in basic electromagnetic environment as defined in EN61326-1 : 2013. Length of test cables should not exceed 3 m. |
| **READOUT SPECIFICATIONS** | |
| Resolution | 0.001°C / 0.001°F / 0.001 K |
| Temperature units | °C / °F / K |

| **THERMAL SPECIFICATIONS** | **RTC-700 A/B/C** |
|---|---|
| Maximum temperature | 700°C / 1292°F |
| Minimum temperature* | 10°C / 50°F @ ambient temperature 0°C / 32°F |
| | 33°C / 91°F @ ambient temperature 23°C / 73.4°F |
| | 50°C / 122°F@ ambient temperature 40°C / 104°F |

*The minimum temperature will be affected by the number of sensors and the dimensions of the sensors being calibrated.

**THERMAL SPECIFICATIONS** **RTC-700 A/B/C**

| | |
|---|---|
| Well specifications | Loaded with 4 x 4mm sensors:<br><br>40 mm / 1.57 inch axial homogeneity:<br>±0.100°C/0.18°F @ 33°C/91°F to 100°C/212°F<br><br>40 mm / 1.57 inch axial homogeneity:<br>±0.200°C/0.36°F @ 100°C/212°F to 420°C/788°F<br><br>40 mm / 1.57 inch axial homogeneity:<br>±0.300°C/0.54°F@420°C/788°F to 700°C/1292°F<br><br>50 mm / 1.97 inch axial homogeneity:<br>±0.100°C/0.18°F @ 33°C/91°F to 100°C/212°F<br><br>50 mm / 1.97 inch axial homogeneity:<br>±0.200°C/0.36°F @ 100°C/212°F to 420°C/788°F<br><br>50 mm / 1.97 inch axial homogeneity:<br>±0.300°C/0.54°F@420°C/788°F to 700°C/1292°F<br><br>60 mm / 2.36 inch axial homogeneity:<br>±0.100°C/0.18°F @ 33°C/91°F to 100°C/212°F<br><br>60 mm / 2.36 inch axial homogeneity:<br>±0.250°C/0.45°F @ 100°C/212°F to 420°C/788°F<br><br>60 mm / 2.36 inch axial homogeneity:<br>±0.400°C/0.72°F@420°C/788°F to 700°C/1292°F<br><br>70 mm / 2.76 inch axial homogeneity:<br>±0.100°C/0.18°F @ 33°C/91°F to 100°C/212°F<br><br>70 mm / 2.76 inch axial homogeneity:<br>±0.250°C/0.45°F @ 100°C/212°F to 420°C/788°F<br><br>70 mm / 2.76 inch axial homogeneity:<br>±0.500°C/0.9°F @ 420°C/788°F to 700°C/1292°F<br><br>80 mm / 3.15 inch axial homogeneity:<br>±0.150°C/0.27°F @ 33°C/91°F to 100°C/212°F<br><br>80 mm / 3.15 inch axial homogeneity:<br>±0.300°C/0.54°F @ 100°C/212°F to 420°C/788°F<br><br>80 mm / 3.15 inch axial homogeneity:<br>±0.600°C/1.08°F@420°C/788°F to 700°C/1292°F<br><br>Loaded with 4 x 4mm sensor and 1 x 6 mm sensor<br><br>DLC active:<br><br>40 mm / 1.57 inch axial homogeneity:<br>±0.120°C/0.22°F @ 33°C/91°F to 100°C/212°F |

| THERMAL SPECIFICATIONS | RTC-700 A/B/C |
|---|---|
| Well specifications | 40 mm / 1.57 inch axial homogeneity:<br>±0.200°C/0.36°F @ 100°C/212°F to 420°C/788°F |
| | 40 mm / 1.57 inch axial homogeneity:<br>±0.300°C/0.54°F@420°C/788°F to 700°C/1292°F |
| | 50 mm / 1.97 inch axial homogeneity:<br>±0.120°C/0.22°F @ 33°C/91°F to 100°C/212°F |
| | 50 mm / 1.97 inch axial homogeneity:<br>±0.200°C/0.36°F @ 100°C/212°F to 420°C/788°F |
| | 50 mm / 1.97 inch axial homogeneity:<br>±0.350°C/0.63°F@420°C/788°F to 700°C/1292°F |
| | 60 mm / 2.36 inch axial homogeneity:<br>±0.150°C/0.27°F @ 33°C/91°F to 100°C/212°F |
| | 60 mm / 2.36 inch axial homogeneity:<br>±0.250°C/0.45°F @ 100°C/212°F to 420°C/788°F |
| | 60 mm / 2.36 inch axial homogeneity:<br>±0.400°C/0.72°F@420°C/788°F to 700°C/1292°F |
| | 70 mm / 2.76 inch axial homogeneity:<br>±0.150°C/0.27°F @ 33°C/91°F to 100°C/212°F |
| | 70 mm / 2.76 inch axial homogeneity:<br>±0.250°C/0.45°F @ 100°C/212°F to 420°C/788°F |
| | 70 mm / 2.76 inch axial homogeneity:<br>±0.400°C/0.72°F@420°C/788°F to 700°C/1292°F |
| | 80 mm / 3.15 inch axial homogeneity:<br>±0.200°C/0.36°F @ 33°C/91°F to 100°C/212°F |
| | 80 mm / 3.15 inch axial homogeneity:<br>±0.250°C/0.45°F @ 100°C/212°F to 420°C/788°F |
| | 80 mm / 3.15 inch axial homogeneity:<br>±0.400°C/0.72°F@420°C/788°F to 700°C/1292°F |

| THERMAL SPECIFICATIONS | RTC-700 A/B/C |
|---|---|
| | Difference between borings : |
| | ±0.01°C/0.02°F @ 33°C/91.4°F to 100°C/212°F |
| | ±0.025°C/0.045°F @ 100°C/212°F to 420°C/788°F |
| | ±0.040°C/0.072°F @ 420°C/788°F to 600°C/1112°F |
| | ±0.050°C/0.09°F @ 600°C/1112°F to 660°C/1220°F |
| | ±0.060°C/0.108°F @ 660°C/1220°F to 700°C/1292°F |
| | Influence from load : |
| | 0.01°C/0.02°F @ 33°C/91.4°F to 100°C/212°F |
| | 0.05°C/0.09°F @ 100°C/212°F to 420°C/788°F |
| | 0.15°C/0.27°F @ 420°C/788°F to 700°C/1292°F |
| | Influence from load with ext. reference : |
| | 0.01°C/0.02°F @ 33°C/91.4°F to 100°C/212°F |
| | 0.02°C/0.04°F @ 100°C/212°F to 420°C/788°F |
| | 0.03°C/0.05°F @ 420°C/788°F to 700°C/1292°F |
| | Difference between inserts : |
| | 0.05°C/0.09°F @ 420°C/788°F |
| | 0.10°C/0.18°F @ 700°C/1292°F |
| | Long term drift (1 year): ±0.11°C/±0.20°F |
| Calibration accuracy (test limit) | ±0.10°C (±0.18°F) |
| Temperature coefficient | ±0.005°C/°C (0-20°C and 26-40°C) / ±0.009°F/°F (32-68°F and 79-104°F) |
| Stability | ±0.008°C/0.014°F@33°C/91.4°F to 125°C/257°F |
| | ±0.015°C/0.027°F@125°C/257°F to 425°C/797°F |
| | ±0.020°C/0.36°F@425°C/797°F to 700°C/1292°F |
| Accuracy | ±0.30°C/0.54°F @ 33°C/91.4°F to 660°C/1220°F |
| | ±1.69°C/3.04°F@660°C/1220°F to 700°C/1292°F |
| Heating time incl. insert | 33°C/91.4°F to 700°C/1292°F : 45 min. |

| THERMAL SPECIFICATIONS | RTC-700 A/B/C | |
|---|---|---|
| Time to stability | 10 min. | |
| Cooling time incl. insert | 700°C / 1292°F to 100°C / 212°F : | 43 min. |
| | 100°C / 212°F to 50°C / 122°F : | 17 min. |
| | 50°C / 122°F to 33°C / 91.4°F : | 20 min. |

## STANDARDS

| | |
|---|---|
| **The following standards are observed according to the EMC-Directive (2014/30/EU)** | EN 61326-1: 2013: Electrical equipment for measurement, control and laboratory use – EMC requirements |
| **The following standards are observed according to the low voltage-directive (2014/35/EU)** | EN61010-1:2010 : Safety requirements for electrical equipment for measurement, control and laboratory use, part 1: General requirement |
| | EN61010-2-010:2014 : Safety requirements for electrical equipment for measurement, control and laboratory use, part 2-010: Particular requirements for laboratory equipment for the heating of materials (RTC-250/700 only) |
| | EN61010-2-030:2010 : Safety requirements for electrical equipment for measurement, control and laboratory use, part 2-030: Particular requirements for testing and measuring circuits |

## PATENTS

| | |
|---|---|
| **RTC-159** | |
| Patented heating technology | Patent No.: EP2074374/US8342742 |
| **RTC-700** | |
| Patented fast cooling technology | Patent No.: EP2399107/US8721173 |
| All RTC models B and C | |
| Patented DLC system | Patent No.: EP2350588/US8801271 |

# TECHNICAL SPECIFICATIONS – B VERSIONS ONLY

## INPUT SPECIFICATIONS

| | |
|---|---|
| **mA input** | |
| Signal range | 0 – 24 mA |
| Internal power supply | 24 V, max. 28 mA |
| Resolution | 0.0001mA / 0.001°C / 0.001°F |
| Accuracy | ±(0.005% of rdg. + 0.010% of F.S.) |
| Temperature coefficient | ±7 ppm F.S./°C (0-20°C and 26-40°C) / (32-68°F and 79-104°F) |
| Input impedance | < 10 Ω |
| Type of connection | 4 mm safety sockets |
| **Voltage input** | |
| Signal range | 0 – 12 V |
| Resolution | 0.0001V / 0.001°C / 0.001°F |
| Accuracy | ±(0.005% of rdg. + 0.010% of F.S.) |
| Temperature coefficient | ±5 ppm F.S./°C (0-20°C and 26-40°C) / (32-68°F and 79-104°F) |
| Input impedance | > 1 MΩ |
| Type of connection | 4 mm safety sockets |
| **Thermocouple input** | |
| Signal range | -78mV – 78 mV (E, J, K, N, R, S, T, U, B) |
| Resolution | 0.0001mV / 0.001°C / 0.001°F (E, J, K, N, R, S, T, U, B) |
| Accuracy | ±(0.005% of rdg. + 0.005% of F.S.), see page 164 – 166 for accuracy in °C/°F |
| Temperature coefficient | ±5 ppm F.S./°C (0-20°C and 26-40°C) / (32-68°F and 79-104°F) |
| Input impedance | > 1 MΩ |
| Type of connection | Mini TC-connector |

## INPUT SPECIFICATIONS

**RTD-input (2-, 3- or 4-wire)**

| | |
|---|---|
| Signal range | 0-400 Ω (P10(90)386/P50(90)385/P100(90)385/P50(90)391/P100(90)391/P100(90)392/ M50(90)428/ M100(90)428/H100(90)617/H120(90)672/Pt-100 MILL)<br><br>0-4000 Ω (P200(90)385/P500(90)385/P1000(90)385/YSI-400) |
| Internal power supply | Excitation current 0.3 mA |
| Resolution | 0.0001Ω / 0.001°C / 0.001°F (P10(90)386/P50(90)385/P100(90)385/P50(90)391/P100(90)391/P100(90)392/ M50(90)428/ M100(90)428/H100(90)617/H120(90)672/Pt-100 MILL)<br><br>0.001Ω / 0.001°C / 0.001°F (P200(90)385/P500(90)385/P1000(90)385/YSI-400) |
| Accuracy | ±(0.002% of rdg. + 0.002% of F.S.), (0-400Ω range), see page 169 - 173 for accuracy in °C/°F<br><br>±(0.005% of rdg. + 0.005% of F.S.), (0-4000Ω range), see page 167 - 168 + 173 for accuracy in °C/°F |
| Temperature coefficient | ±2 ppm F.S./°C (0-20°C and 26-40°C) / (32-68°F and 79-104°F) |
| Type of connection | 4 mm safety sockets |

**Switch test input**

| | |
|---|---|
| Signal range | on : 0-10kΩ / off : >100kΩ |
| Internal power supply | 5 V (open) |
| Type of connection | 4 mm safety sockets |

| | |
|---|---|
| **Reference input (4 wire true ohm Pt100)** | **B and C versions only** |
| Signal range | 0Ω – 400Ω |
| Internal power supply | Measuring current 0.8 mA |
| Resolution | 0.0001Ω / 0.001°C / 0.001°F |
| Accuracy | ±(0.0012% of rdg. + 0.0005% of F.S.), see page 173 for accuracy in °C/°F |
| Temperature coefficient | ±2 ppm F.S./°C (0-20°C and 26-40°C) / (32-68°F and 79-104°F) |
| Type of connection | LEMO Redell 6-pole-connector |
| **DLC (TC input)** | **B and C versions only** |
| Signal range | -78mV – 78mV |
| Resolution | 0.01°C / 0.01°F |
| Accuracy | 0.39µV / 0.014°C @ 0mV |
| Temperature coefficient | ±5 ppm F.S./°C (0-20°C and 26-40°C) / (32-68°F and 79-104°F) |
| Type of connection | LEMO Redell 4-pole-connector |

| INPUT SPECIFICATIONS | ACCURACY IN °C/°F |
|---|---|
| Accuracy thermocouple type E input | ±0.18°C(±0.32°F) @ -200°C(-328°F) |
| -200°C to 1000°C | ±0.09°C(±0.17°F) @ -50°C(-58°F) |
| (excluding sensor accuracy) | ±0.06°C(±0.11°F) @ 0°C(32°F) |
| | ±0.06°C(±0.11°F) @ 155°C(311°F) |
| | ±0.07°C(±0.12°F) @ 320°C(608°F) |
| | ±0.08°C(±0.14°F) @ 650°C(1202°F) |
| | ±0.10°C(±0.29°F) @ 1000°C(1832°F) |
| Accuracy thermocouple type J input | ±0.23°C(±0.41°F) @ -210°C(-346°F) |
| -210°C to 1200°C | ±0.10°C(±0.18°F) @ -100°C(-148°F) |
| (excluding sensor accuracy) | ±0.08°C(±0.14°F) @ 0°C(32°F) |
| | ±0.09°C(±0.16°F) @ 155°C(311°F) |
| | ±0.09°C(±0.16°F) @ 320°C(608°F) |
| | ±0.09°C(±0.17°F) @ 650°C(1202°F) |
| | ±0.13°C(±0.23°F) @ 1200°C(2192°F) |
| Accuracy thermocouple type K input | ±0.27°C(±0.49°F) @ -200°C(-328°F) |
| -200°C to 1372°C | ±0.14°C(±0.24°F) @ -100°C(-148°F) |
| (excluding sensor accuracy) | ±0.10°C(±0.19°F) @ 0°C(32°F) |
| | ±0.11°C(±0.20°F) @ 155°C(311°F) |
| | ±0.11°C(±0.20°F) @ 320°C(608°F) |
| | ±0.13°C(±0.23°F) @ 650°C(1202°F) |
| | ±0.20°C(±0.36°F) @ 1372°C(2502°F) |

| INPUT SPECIFICATIONS | ACCURACY IN °C/°F |
|---|---|
| Accuracy thermocouple type T input | ±0.27°C(±0.49°F) @ -200°C(-328°F) |
| -200°C to 400°C | ±0.15°C(±0.26°F) @ -100°C(-148°F) |
| (excluding sensor accuracy) | ±0.10°C(±0.18°F) @ 0°C(32°F) |
| | ±0.08°C(±0.15°F) @ 155°C(311°F) |
| | ±0.08°C(±0.15°F) @ 320°C(608°F) |
| | ±0.08°C(±0.14°F) @ 400°C(752°F) |
| Accuracy thermocouple type R input | ±1.30°C(±2.35°F) @ -50°C(-58°F) |
| -50°C to 1768°C | ±0.78°C(±1.40°F) @ 0°C(32°F) |
| (excluding sensor accuracy) | ±0.47°C(±0.84°F) @ 155°C(311°F) |
| | ±0.40°C(±0.73°F) @ 320°C(608°F) |
| | ±0.39°C(±0.70°F) @ 650°C(1202°F) |
| | ±0.41°C(±0.74°F) @ 1768°C(3214°F) |
| Accuracy thermocouple type S input | ±0.98°C(±1.76°F) @ -50°C(-58°F) |
| -50°C to 1768°C | ±0.78°C(±1.40°F) @ 0°C(32°F) |
| (excluding sensor accuracy) | ±0.49°C(±0.89°F) @ 155°C(311°F) |
| | ±0.45°C(±0.81°F) @ 320°C(608°F) |
| | ±0.41°C(±0.73°F) @ 650°C(1202°F) |
| | ±0.46°C(±0.83°F) @ 1768°C(3214°F) |
| Accuracy thermocouple type B | ±1.57°C(±2.83°F) @ 250°C(482°F) |
| 250°C to 1820°C | ±1.19°C(±2.14°F) @ 320°C(608°F) |
| (excluding sensor accuracy) | ±0.67°C(±1.21°F) @ 650°C(1202°F) |
| | ±0.48°C(±0.86°F) @ 1820°C(3308°F) |

| INPUT SPECIFICATIONS | ACCURACY IN °C/°F |
|---|---|
| Accuracy thermocouple type N | ±0.41°C(±0.74°F) @ -200°C(-328°F) |
| -200°C to 1300°C | ±0.20°C(±0.35°F) @ -100°C(-148°F) |
| (excluding sensor accuracy) | ±0.15°C(±0.27°F) @ 0°C(32°F) |
| | ±0.13°C(±0.23°F) @ 155°C(311°F) |
| | ±0.13°C(±0.23°F) @ 320°C(608°F) |
| | ±0.13°C(±0.23°F) @ 650°C(1202°F) |
| | ±0.14°C(±0.25°F) @ 800°C(1472°F) |
| | ±0.15°C(±0.27°F) @ 1000°C(1832°F) |
| | ±0.16°C(±0.29°F) @ 1200°C(2192°F) |
| | ±0.17°C(±0.31°F) @ 1300°C(2372°F) |
| Accuracy thermocouple type L | ±0.14°C(±0.25°F) @ -200°C(-328°F) |
| * -200°C to 900°C | ±0.09°C(±0.17°F) @ -100°C(-148°F) |
| (excluding sensor accuracy) | ±0.08°C(±0.14°F) @ 0°C(32°F) |
| | ±0.08°C(±0.14°F) @ 155°C(311°F) |
| | ±0.09°C(±0.15°F) @ 320°C(608°F) |
| | ±0.09°C(±0.15°F) @ 650°C(1202°F) |
| | ±0.09°C(±0.15°F) @ 900°C(1652°F) |
| Accuracy thermocouple type U | ±0.13°C(±0.24°F) @ -80°C(-112°F) |
| -80°C to 600°C | ±0.10°C(±0.18°F) @ 0°C(32°F) |
| (excluding sensor accuracy) | ±0.08°C(±0.14°F) @ 155°C(311°F) |
| | ±0.08°C(±0.14°F) @ 320°C(608°F) |
| | ±0.08°C(±0.14°F) @ 600°C(1112°F) |
| Accuracy automatic cold junction compensation | ±0.30°C (±0.54°F) @ ambient temperature 0°C to 40°C (32°F to 104°F). |

| INPUT SPECIFICATIONS | ACCURACY IN °C/°F |
|---|---|
| Accuracy RTD Pt1000 385 | ±0.049°C(±0.088°F) @ -200°C(-328°F) |
| Pt1000(90)385: -200°C to 850°C | ±0.058°C(±0.104°F) @ -90°C(-130°F) |
| * Pt1000(68)385: -200°C to 850°C | ±0.061°C(±0.109°F) @ -50°C(-58°F) |
| (excluding sensor accuracy) | ±0.064°C(±0.116°F) @ 0°C(32°F) |
| | ±0.075°C(±0.135°F) @ 155°C(311°F) |
| | ±0.088°C(±0.158°F) @ 320°C(608°F) |
| | ±0.096°C(±0.172°F) @ 420°C(788°F) |
| | ±0.117°C(±0.210°F) @ 660°C(1220°F) |
| | ±0.121°C(±0.217°F) @ 700°C(1292°F) |
| | ±0.136°C(±0.244°F) @ 850°C(1562°F) |
| | ±0.095°C(±0.171°F) @ -200°C(-328°F) |
| Accuracy RTD | ±0.108°C(±0.193°F) @ -90°C(-130°F) |
| Pt500(90)385: -200°C to 850°C | ±0.111°C(±0.200°F) @ -50°C(-58°F) |
| (excluding sensor accuracy) | ±0.116°C(±0.208°F) @ 0°C(32°F) |
| | ±0.129°C(±0.232°F) @ 155°C(311°F) |
| | ±0.145°C(±0.260°F) @ 320°C(608°F) |
| | ±0.154°C(±0.278°F) @ 420°C(788°F) |
| | ±0.181°C(±0.325°F) @ 660°C(1220°F) |
| | ±0.185°C(±0.333°F) @ 700°C(1292°F) |
| | ±0.204°C(±0.367°F) @ 850°C(1562°F) |

| INPUT SPECIFICATIONS | ACCURACY IN °C/°F |
|---|---|
| Accuracy RTD | ±0.118°C(±0.213°F) @ -200°C(-328°F) |
| * Pt400(90)385: -200°C to 850°C | ±0.132°C(±0.238°F) @ -90°C(-130°F) |
| (excluding sensor accuracy) | ±0.137°C(±0.245°F) @ -50°C(-58°F) |
| | ±0.141°C(±0.254°F) @ 0°C(32°F) |
| | ±0.156°C(±0.280°F) @ 155°C(311°F) |
| | ±0.173°C(±0.311°F) @ 320°C(608°F) |
| | ±0.184°C(±0.330°F) @ 420°C(788°F) |
| | ±0.212°C(±0.382°F) @ 660°C(1220°F) |
| | ±0.218°C(±0.391°F) @ 700°C(1292°F) |
| | ±0.238°C(±0.428°F) @ 850°C(1562°F) |
| Accuracy RTD | ±0.234°C(±0.421°F) @ -200°C(-328°F) |
| Pt200(90)385: -200°C to 850°C | ±0.256°C(±0.461°F) @ -90°C(-130°F) |
| (excluding sensor accuracy) | ±0.262°C(±0.472°F) @ -50°C(-58°F) |
| | ±0.269°C(±0.484°F) @ 0°C(32°F) |
| | ±0.290°C(±0.522°F) @ 155°C(311°F) |
| | ±0.314°C(±0.565°F) @ 320°C(608°F) |
| | ±0.330°C(±0.593°F) @ 420°C(788°F) |
| | ±0.371°C(±0.668°F) @ 660°C(1220°F) |
| | ±0.379°C(±0.682°F) @ 700°C(1292°F) |
| | ±0.409°C(±0.736°F) @ 850°C(1562°F) |

| INPUT SPECIFICATIONS | ACCURACY IN °C/°F |
|---|---|
| Accuracy RTD | ±0.020°C(±0.035°F) @ -200°C(-328°F) |
| Pt100(90)385: -200°C to 850°C | ±0.024°C(±0.042°F) @ -90°C(-130°F) |
| * Pt100(68)385: -200°C to 850°C | ±0.025°C(±0.044°F) @ -50°C(-58°F) |
| (excluding sensor accuracy) | ±0.026°C(±0.047°F) @ 0°C(32°F) |
| | ±0.030°C(±0.054°F) @ 155°C(311°F) |
| | ±0.035°C(±0.063°F) @ 320°C(608°F) |
| | ±0.039°C(±0.069°F) @ 420°C(788°F) |
| | ±0.047°C(±0.084°F) @ 660°C(1220°F) |
| | ±0.049°C(±0.087°F) @ 700°C(1292°F) |
| | ±0.055°C(±0.098°F) @ 850°C(1562°F) |
| Accuracy RTD | ±0.038°C(±0.069°F) @ -200°C(-328°F) |
| Pt50(90)385: -200°C to 850°C | ±0.043°C(±0.078°F) @ -90°C(-130°F) |
| * Pt50(68)385: -200°C to 850°C | ±0.045°C(±0.080°F) @ -50°C(-58°F) |
| (excluding sensor accuracy) | ±0.047°C(±0.083°F) @ 0°C(32°F) |
| | ±0.052°C(±0.093°F) @ 155°C(311°F) |
| | ±0.058°C(±0.104°F) @ 320°C(608°F) |
| | ±0.062°C(±0.111°F) @ 420°C(788°F) |
| | ±0.073°C(±0.130°F) @ 660°C(1220°F) |
| | ±0.074°C(±0.134°F) @ 700°C(1292°F) |
| | ±0.082°C(±0.147°F) @ 850°C(1562°F) |

| INPUT SPECIFICATIONS | ACCURACY IN °C/°F |
|---|---|
| Accuracy RTD | ±0.186°C(±0.335°F) @ -200°C(-328°F) |
| Pt10(90)385: -200°C to 850°C | ±0.202°C(±0.363°F) @ -90°C(-130°F) |
| (excluding sensor accuracy) | ±0.206°C(±0.370°F) @ -50°C(-58°F) |
| | ±0.210°C(±0.378°F) @ 0°C(32°F) |
| | ±0.224°C(±0.402°F) @ 155°C(311°F) |
| | ±0.239°C(±0.430°F) @ 320°C(608°F) |
| | ±0.249°C(±0.448°F) @ 420°C(788°F) |
| | ±0.276°C(±0.496°F) @ 660°C(1220°F) |
| | ±0.281°C(±0.505°F) @ 700°C(1292°F) |
| | ±0.301°C(±0.541°F) @ 850°C(1562°F) |
| Accuracy RTD | ±0.019°C(±0.034°F) @ -200°C(-328°F) |
| Pt100(90)391: -200°C to 850°C | ±0.023°C(±0.041°F) @ -90°C(-130°F) |
| * Pt100(68)391: -200°C to 850°C | ±0.024°C(±0.043°F) @ -50°C(-58°F) |
| * Pt100(06)391: -200°C to 850°C | ±0.025°C(±0.045°F) @ 0°C(32°F) |
| (excluding sensor accuracy) | ±0.030°C(±0.054°F) @ 155°C(311°F) |
| | ±0.035°C(±0.062°F) @ 320°C(608°F) |
| | ±0.038°C(±0.067°F) @ 420°C(788°F) |
| | ±0.046°C(±0.083°F) @ 660°C(1220°F) |
| | ±0.048°C(±0.086°F) @ 700°C(1292°F) |
| | ±0.054°C(±0.096°F) @ 850°C(1562°F) |
| | ±0.065°C(±0.116°F) @ 1100°C(2012°F) |

| INPUT SPECIFICATIONS | ACCURACY IN °C/°F |
|---|---|
| Accuracy RTD | ±0.038°C(±0.067°F) @ -200°C(-328°F) |
| Pt50(90)391: -200°C to 1100°C | ±0.042°C(±0.076°F) @ -90°C(-130°F) |
| * Pt50(68)391: -200°C to 1100°C | ±0.044°C(±0.079°F) @ -50°C(-58°F) |
| (excluding sensor accuracy) | ±0.046°C(±0.082°F) @ 0°C(32°F) |
| | ±0.051°C(±0.092°F) @ 155°C(311°F) |
| | ±0.057°C(±0.102°F) @ 320°C(608°F) |
| | ±0.061°C(±0.109°F) @ 420°C(788°F) |
| | ±0.071°C(±0.128°F) @ 660°C(1220°F) |
| | ±0.073°C(±0.132°F) @ 700°C(1292°F) |
| | ±0.081°C(±0.145°F) @ 850°C(1562°F) |
| | ±0.095°C(±0.170°F) @ 1100°C(2012°F) |
| Accuracy RTD | ±0.020°C(±0.036°F) @ -200°C(-328°F) |
| Pt100(90)392: -200°C to 630°C | ±0.023°C(±0.042°F) @ -90°C(-130°F) |
| (excluding sensor accuracy) | ±0.024°C(±0.042°F) @ -50°C(-58°F) |
| | ±0.024°C(±0.046°F) @ 0°C(32°F) |
| | ±0.030°C(±0.054°F) @ 155°C(311°F) |
| | ±0.035°C(±0.062°F) @ 320°C(608°F) |
| | ±0.038°C(±0.068°F) @ 420°C(788°F) |
| | ±0.045°C(±0.081°F) @ 630°C(1166°F) |
| Accuracy RTD | ±0.020°C(±0.035°F) @ -200°C(-328°F) |
| M100(90)428: -200°C to 200°C | ±0.021°C(±0.038°F) @ -90°C(-130°F) |
| * M100(68)428: -200°C to 200°C | ±0.022°C(±0.040°F) @ -50°C(-58°F) |
| (excluding sensor accuracy) | ±0.024°C(±0.043°F) @ 0°C(32°F) |
| | ±0.027°C(±0.048°F) @ 155°C(311°F) |
| | ±0.028°C(±0.050°F) @ 200°C(392°F) |

| INPUT SPECIFICATIONS | ACCURACY IN °C/°F |
|---|---|
| Accuracy RTD | ±0.038°C(±0.069°F) @ -200°C(-328°F) |
| M50(90)428 : -200°C to 200°C | ±0.040°C(±0.071°F) @ -90°C(-130°F) |
| * M50(68)428 : -200°C to 200°C | ±0.041°C(±0.073°F) @ -50°C(-58°F) |
| (excluding sensor accuracy) | ±0.043°C(±0.076°F) @ 0°C(32°F) |
| | ±0.046°C(±0.082°F) @ 155°C(311°F) |
| | ±0.047°C(±0.083°F) @ 200°C(392°F) |
| Accuracy RTD | ±0.023°C(±0.041°F) @ -50°C(-58°F) |
| * M100(90)426: -50°C to 200°C | ±0.024°C(±0.043°F) @ 0°C(32°F) |
| (excluding sensor accuracy) | ±0.027°C(±0.048°F) @ 155°C(311°F) |
| | ±0.028°C(±0.050°F) @ 200°C(392°F) |
| Accuracy RTD | ±0.040°C(±0.071°F) @ -50°C(-58°F) |
| * M53(68)426: -50°C to 200°C | ±0.041°C(±0.073°F) @ 0°C(32°F) |
| (excluding sensor accuracy) | ±0.044°C(±0.078°F) @ 155°C(311°F) |
| | ±0.045°C(±0.080°F) @ 200°C(392°F) |
| Accuracy RTD | ±0.042°C(±0.075°F) @ -50°C(-58°F) |
| * M50(90)426: -50°C to 200°C | ±0.043°C(±0.077°F) @ 0°C(32°F) |
| (excluding sensor accuracy) | ±0.046°C(±0.082°F) @ 155°C(311°F) |
| | ±0.047°C(±0.084°F) @ 200°C(392°F) |
| Accuracy RTD | ±0.021°C(±0.037°F) @ -60°C(-76°F) |
| * H100(90)617: -60°C to 180°C | ±0.019°C(±0.033°F) @ 0°C(32°F) |
| (excluding sensor accuracy) | ±0.017°C(±0.030°F) @ 100°C(212°F) |
| | ±0.015°C(±0.027°F) @ 180°C(392°F) |
| Accuracy RTD | ±0.016°C(±0.029°F) @ -80°C(--112°F) |
| H120(90)672: -80°C to 260°C | ±0.015°C(±0.027°F) @ 0°C(32°F) |
| (excluding sensor accuracy) | ±0.014°C(±0.025°F) @ 100°C(212°F) |
| | ±0.012°C(±0.021°F) @ 260°C(500°F) |

| INPUT SPECIFICATIONS | ACCURACY IN °C/°F |
|---|---|
| Accuracy RTD | ±0.020°C(±0.036°F) @ -200°C(-328°F) |
| Pt100 MILL: -200°C to 850°C | ±0.023°C(±0.041°F) @ -90°C(-130°F) |
| (excluding sensor accuracy) | ±0.024°C(±0.043°F) @ -50°C(-58°F) |
| | ±0.026°C(±0.046°F) @ 0°C(32°F) |
| | ±0.030°C(±0.054°F) @ 155°C(311°F) |
| | ±0.035°C(±0.063°F) @ 320°C(608°F) |
| | ±0.038°C(±0.068°F) @ 420°C(788°F) |
| | ±0.046°C(±0.083°F) @ 660°C(1220°F) |
| | ±0.048°C(±0.086°F) @ 700°C(1292°F) |
| | ±0.054°C(±0.097°F) @ 850°C(1562°F) |
| Accuracy RTD YSI-400<br>15°C to 50°C<br>(excluding sensor accuracy) | ±0.002°C(±0.004°F) @ 15°C(59°F)<br>±0.008°C(±0.013°F) @ 50°C(122°F) |
| Accuracy Pt100 reference input | ±0.006°C(±0.010°F) @ -200°C(-328°F) |
| (excluding sensor accuracy) | ±0.007°C(±0.013°F) @ -90°C(-130°F) |
| | ±0.008°C(±0.015°F) @ -50°C(-58°F) |
| | ±0.008°C(±0.015°F) @ 0°C(32°F) |
| | ±0.011°C(±0.019°F) @ 155°C(311°F) |
| | ±0.014°C(±0.024°F) @ 320°C(608°F) |
| | ±0.015°C(±0.027°F) @ 420°C(788°F) |
| | ±0.020°C(±0.035°F) @ 660°C(1220°F) |
| | ±0.020°C(±0.036°F) @ 700°C(1292°F) |
| | ±0.023°C(±0.042°F) @ 850°C(1562°F) |

* Available upon request on selected markets.

**RTC-156/157/187 A/B/C**

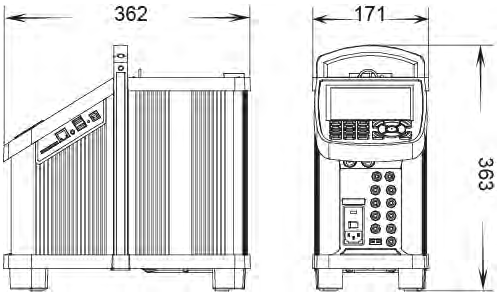


**RTC-158/250 A/B/C**

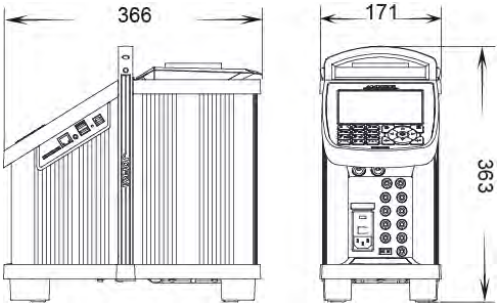


**RTC-159 A/B/C**

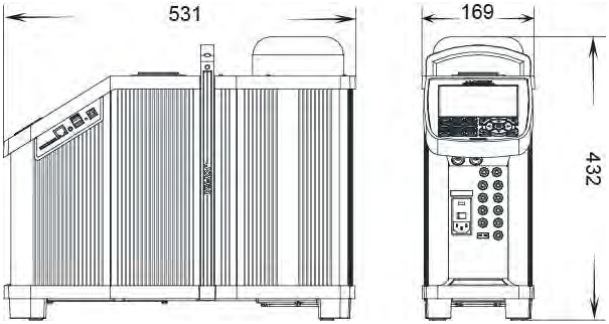


**RTC-700 A/B/C**

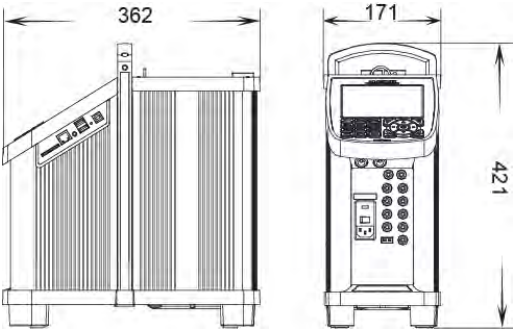

# 9.0 List of accessories

All parts listed in the list of accessories can be obtained from the factory through our dealers.

Please contact your dealer for assistance if you require parts, which do not appear on the list.

## List of accessories

| Accessories | Parts no. |
|---|---|
| Fuse 115V, 10AF (RTC-250/700) | 60B302 |
| Fuse 230V, 5AF (RTC-250/700) | 127573 |
| Fuse 250V, 8AT (RTC-156/157/158/187) | 127211 |
| Fuse 250V, 4AT (RTC-156/157/158/187) | 127210 |
| Tool for insertion tube | 60F170 |
| Insulation collar (RTC-156 only) | 123652 |
| Set of silicone plugs (RTC-156/157/158/159/187/250 only) | 126280 |
| Heat shield (RTC-700 only) | 127375 |
| Carrying case (RTC-156/157/187) | 127292 |
| Carrying case (RTC-158/250) | 127782 |
| Carrying case (RTC-159) | 128524 |
| Carrying case (RTC-700) | 127552 |
| Mains cable, 115V, US, type B | 60F135 |
| Mains cable, 240V, UK, type C | 60F136 |
| Mains cable, 220V, South Africa, type D | 60F137 |
| Mains cable, 220V, Italy, type E | 60F138 |
| Mains cable, 240V, Australia, type F | 60F139 |
| Mains cable, 230V, Europe, type A | 60F140 |
| Mains cable, 230V, Denmark, type G | 60F141 |
| Mains cable, 220V, Switzerland, type H | 60F142 |
| Mains cable, 230V, Israel, type I | 60F143 |
| Thermocouple male plug type K | 120517 |
| Thermocouple male plug type N | 120514 |
| Thermocouple male plug type T | 120515 |

## List of accessories

| Accessories | Parts no. |
|---|---|
| Thermocouple male plug type Cu-Cu | 120519 |
| Thermocouple male plug type J | 120516 |
| Thermocouple male plug type R/S | 120518 |
| USB cable | 127278 |
| Electronical ref. manual +JOFRACAL PC software | 127429 |
| Mini Jack connector | 122771 |
| Dust filter (RTC-159 only) | 128222 |
| Cleaning brush ø4mm | 122832 |
| Cleaning brush ø6mm | 60F174 |
| Cleaning brush ø8mm | 122822 |
| Application kit for calibration of sanitary sensors | 127279 |
| Liquid bath kit (RTC-158) | 125022 |
| Liquid bath kit (RTC-250) | 125035 |
| Dry-block kit – metric (RTC-158) | 125023 |
| Dry-block kit – inch (RTC-158) | 125024 |
| Dry-block kit – metric (RTC-250) | 127871 |
| Dry-block kit – inch (RTC-250) | 127872 |
| Silicone oil for RTC-158 (0.75 l.) | 125033 |
| Silicone oil for RTC-250 (0.75 l.) | 124885 |
| Support rod set for sensors | 127277 |
| Extra fixture for sensor grip | 125066 |
| Extra sensor grip | 125067 |
| Set of test cables | 104203 |
| Cable for STS-200, LEMO/LEMO 6-pol, 650 mm. | 127131 |
| Reference probe STS-200 90°, with accredited certificate, diameter 4mm, (-45°C to 155°C) (RTC-156/157/187) | STS200A915EH |
| Reference probe STS-200 90°, with accredited certificate, diameter ¼”, (-45°C to 155°C) (RTC-156/157/187) | STS200B915EH |
| Reference probe STS-200 90°, with accredited certificate, diameter 4mm, (-100°C to 155°C) (RTC-159) | STS200A917EH |
| Reference probe STS-200 90°, with accredited certificate, diameter ¼”, (-100°C to 155°C) (RTC-159) | STS200B917EH |
| Reference probe STS-200 90°, with accredited certificate, diameter 4mm, (-45°C to 155°C) (RTC-158) | STS200A916EH |

| Accessories | Parts no. |
|---|---|
| Reference probe STS-200 90°, with accredited certificate, diameter ¼", (-45°C to 155°C) (RTC-158) | STS200B916EH |
| Reference probe STS-200 90°, with accredited certificate, diameter 4mm, (-0°C to 250°C) (RTC-250) | STS200A925EH |
| Reference probe STS-200 90°, with accredited certificate, diameter ¼", (-0°C to 250°C) (RTC-250) | STS200B925EH |

# 10.0 Standard insertion tubes

## Caution…

Use of other insertion tubes may reduce performance of the calibrator. To get the best results out of your calibrator, the insertion tube dimensions, tolerance and material are critical. We highly advise using the JOFRA insertion tubes, as they guarantee trouble free operation.

| | PARTS NO. FOR STANDARD INSERTION TUBES WITH HOLES FOR 4 MM/1/4" REF. SENSORS AND DLC SENSOR - UNDRILLED | | | | |
|---|---|---|---|---|---|
| **Sensor size** | **RTC-156/157/187 A/B/C (Aluminium tubes)** | **RTC-159 A/B/C (Aluminium tubes)** | **RTC-158 A/B/C (Aluminium tubes)** | **RTC-250 A/B/C (Aluminium tubes)** | **RTC-700 A/B/C (Alu. Bronze tubes)** |
| Undrilled | 127299 | 128453 | 124899 | 127758 | 127197 |
| Undrilled with DLC hole | 127300 | 128454 | 127829 | 127834 | 127198 |
| Undrilled with DLC and ref. holes | 127301 | 128455 | 127831 | 127835 | 127199 |

| | PARTS NO. FOR STANDARD INSERTION TUBES – MULTI-HOLE - METRIC | | |
|---|---|---|---|
| **Insert type** | **RTC-156/157/187 A/B/C (Aluminium tubes)** | **RTC-159 A/B/C (Aluminium tubes)** | **RTC-700 A/B/C (Alu. Bronze tubes)** |
| Type M01 | 127329 | 128456 | 127200 |
| Type M02 | 127330 | 128457 | 127201 |
| Type M03 | 127331 | 128458 | 127202 |
| Type M04 | 127332 | 128459 | 127203 |
| Type M07 | 127241 | 128462 | 127244 |
| Type M08 | 127242 | 128463 | 127245 |
| Type M09 | 127243 | 128464 | 127246 |
| Set of 4 pcs. Inserts, 3mm to 13mm. | 127326 | 128466 | 127252 |

| | PARTS NO. FOR STANDARD INSERTION TUBES – MULTI-HOLE - IMPERIAL | | |
|---|---|---|---|
| **Insert type** | **RTC-156/157/187 A/B/C (Aluminium tubes)** | **RTC-/159 A/B/C (Aluminium tubes)** | **RTC-700 A/B/C (Alu. Bronze tubes)** |
| Type M05 | 127327 | 128460 | 127204 |
| Type M06 | 127328 | 128461 | 127205 |
| Type M10 | 127247 | 128465 | 127249 |
| Set of 3 pcs. Inserts, 1/8” to 1/2”(7/16”)* | 127311 | 128467* | 127254 |

| | PARTS NO. FOR STANDARD INSERTION TUBES – MULTI-HOLE - METRIC | |
|---|---|---|
| **Insert type** | **RTC-158 A/B/C (Aluminium tubes)** | **RTC-250 A/B/C (Aluminium tubes)** |
| Type M01 | 124897 | 127759 |

| | PARTS NO. FOR STANDARD INSERTION TUBES – MULTI-HOLE - IMPERIAL | |
|---|---|---|
| **Insert type** | **RTC-158 A/B/C (Aluminium tubes)** | **RTC-250 A/B/C (Aluminium tubes)** |
| Type M02 | 124898 | 127760 |

| | PARTS NO. FOR STANDARD INSERTION TUBES WITH HOLES FOR 4 MM/1/4” REF. SENSORS AND DLC SENSOR - IMPERIAL | | |
|---|---|---|---|
| **Sensor size** | **RTC-156/157/187 A/B/C (Aluminium tubes)** | **RTC-159 A/B/C (Aluminium tubes)** | **RTC-700 A/B/C (Alu. Bronze tubes)** |
| 1/8” | 127302 | 128468 | 127164 |
| 3/16” | 127303 | 128469 | 127165 |
| 1/4” | 127304 | 128470 | 127166 |
| 5/16” | 127305 | 128471 | 127167 |
| 3/8” | 127306 | 128472 | 127168 |
| 7/16” | 127307 | 128473 | 127169 |

Continued

| Sensor size | RTC-156/157/187 A/B/C (Aluminium tubes) | RTC-159 A/B/C (Aluminium tubes) | RTC-700 A/B/C (Alu. Bronze tubes) |
|---|---|---|---|
| 1/2” | 127308 | 128474 | 127170 |
| 9/16” | 127309 | 128475 | 127171 |
| 5/8” | 127310 | 128476 | 127172 |
| Set of 9 pcs. Imperial inserts | 127335 | 128491 | 127173 |

| | PARTS NO. FOR STANDARD INSERTION TUBES WITH HOLES FOR 4 MM/1/4” REF. SENSORS AND DLC SENSOR - METRIC | | |
|---|---|---|---|
| Sensor size | RTC-156/157/187 A/B/C (Aluminium tubes) | RTC-159 A/B/C (Aluminium tubes) | RTC-700 A/B/C (Alu. Bronze tubes) |
| 3 mm | 127312 | 128477 | 127148 |
| 4 mm | 127313 | 128478 | 127149 |
| 5 mm | 127314 | 128479 | 127150 |
| 6 mm | 127315 | 128480 | 127151 |
| 7 mm | 127316 | 128481 | 127152 |
| 8 mm | 127317 | 128482 | 127153 |
| 9 mm | 127318 | 128483 | 127154 |
| 10 mm | 127319 | 128484 | 127155 |
| 11 mm | 127320 | 128485 | 127156 |
| 12 mm | 127321 | 128486 | 127157 |
| 13 mm | 127322 | 128487 | 127158 |
| 14 mm | 127323 | 128488 | 127159 |
| 15 mm | 127324 | 128489 | 127160 |
| 16 mm | 127325 | 128490 | 127161 |
| Set of 14 pcs. Metric inserts | 127336 | 128492 | 127162 |

NOTE: All insertion tubes (metric and imperial) for RTC-156/157/158/159/187/250 are supplied with a matching insulation plug.

AMETEK®
SENSORS, TEST & CALIBRATION

www.ametekcalibration.com


**UK**
Tel +44 (0)1243 833 302
stc.uk@ametek.com

**France**
Tel +33 (0)1 30 68 89 40
general.lloyd-instruments@ametek.fr

**Germany**
Tel +49 (0)2159 9136 510
info.mct-de@ametek.de

**Denmark**
Tel +45 4816 8000
jofra@ametek.com

**USA - California**
Tel +1 (800) 444 1850
crystal@ametek.com

**USA - Florida**
Tel +1 (800) 527 9999
cal.info@ametek.com

**India**
Tel +91 22 6196 8200
jofra@ametek.com

**Singapore**
Tel +65 6484 2388
jofra@ametek.com

**China - Beijing**
Tel +86 10 8526 2111 ext. 19
stc.china@ametek.com


*Information in this document is subject to change without notice. ©2020, by AMETEK, Inc., www.ametek.com. All rights reserved.*